OPERATING AND MAINTENANCE MANUAL

KROHN-HITE CORPORATION
580 Massachusetts Ave., Cambridge, Mass. 02139 U.S.A.

Service and Warranty

KROHN-HITE Instruments are designed and manufactured in accordance with sound engineering practices and should give long trouble-free service under normal operating conditions. If your Instrument fails to provide satisfactory service and you are unable to locate the source of trouble, contact our Representative if there is one in your area or write to our Service Department giving all the information available concerning the failure.

Do not return the instrument without our written authorization for, in most cases, we will be able to supply you with the information necessary to repair the instrument and thus avoid the transportation problems and costs. When it becomes necessary to return the instrument to our Factory, kindly pack it carefully and ship it to us via Railway Express, prepaid.

KROHN-HITE Instruments are conservatively designed to provide continuous reliable service under normal laboratory conditions. The material and workmanship in every new instrument manufactured by Krohn-Hite is guaranteed for one year from the date of shipment to the original purchaser. Any instrument developing defects during this period will be repaired or replaced without charge when the failure is the result of defective material or workmanship. This warranty does not apply to electron tubes, fuses, batteries, transistors and other semiconductor devices.

KROHN-HITE CORPORATION reserves the right to make design changes at any time without incurring any obligation to incorporate these changes in instruments previously purchased.

WIDE-BAND · DC-500KC

50 WATT AMPLIFIER

OPERATING AND MAINTENANCE MANUAL

for

Model DCA-50(R)

Serial No. 250

KROHN-HITE CORPORATION

580 Massachusetts Ave., Cambridge 39, Mass., U.S.A.

TABLE OF CONTENTS

	Page
SECTION I - GENERAL DESCRIPTION	
1. Description	1
2. Technical Summary	2
SECTION II - OPERATION	
1. Controls	5
2. Load Impedance	6
3. Line Voltage	6
4. Terminals	6
5. Test Jack Voltage and Output DC Level	7
6. Fuses and Indicators	7
SECTION III - CIRCUIT DESCRIPTION	
1. Input Stage	8
2. Driver Stage	8
3. Output Stage	8
4. Over-all Feedback Network	9
5. Input Selector Switch	9
6. Power Supply	10
SECTION IV - MAINTENANCE	
1. Fuse Failure	13
2. Tube Replacement	14
3. Power Supply Description	15
4. Power Supply Maintenance	15
5. Amplifier Description	18
6. Amplifier Maintenance	18
7. Amplifier Gain vs. Frequency	21
8. Air Filter	24
SECTION V - PERIODIC CALIBRATION AND ADJUSTMENT	25
SECTION VI - ACCEPTANCE AND PERFORMANCE TESTS	30
1. Power Output	31
2. Output Regulation	32
3. Internal Impedance	32
4. Output DC Level Stability	33
5. Frequency Response	33
6. Phase Shift	33
7. Harmonic Distortion	33
8. Hum and Noise	35
9. Dynamic Range	36
10. Square-Wave Response	36
SECTION VII - SERVICE AND WARRANTY	37
SECTION VIII - TYPICAL PERFORMANCE CURVES	38

LIST OF ILLUSTRATIONS

Figure		Page
1.	Model DCA-50 and DCA-50R Power Amplifier	iv
2.	Simplified Schematic for the DC X10, 1 CPS X10, DC-POT and 1 CPS-POT Positions	11
3.	Simplified Schematic for the DC X1 and 1 CPS X1 Positions	11
4.	Open-Loop Amplifier Frequency Response	23
5.	Open-Loop Feedback Network Response	23
6.	Band-Pass (Purifying) Filter	27
7.	Rejection Filter	27
8.	Maximum Power Output vs. Load Resistance	38
9.	Square-Wave Response	38
10.	Voltage Amplification vs. Frequency	39
11.	Maximum Power Output vs. Frequency	39
12.	Distortion vs. Frequency	40
13.	Phase Shift vs. Frequency	40
14.	Top and Bottom View	41
15.	Schematic Diagram - Power Supply Section	Inside Back Cover
16.	Schematic Diagram - Amplifier Section	Inside Back Cover
17.	Voltage and Resistance Chart	Inside Back Cover

MODEL DCA-50

MODEL DCA-50R

Figure 1

1. DESCRIPTION

The Model DCA-50(R)* is a wide-band, low-distortion, direct-coupled power amplifier. It will deliver 50 volt-amperes (100 volt-ampere peaks) into a 330 ohm resistive or inductive load over the frequency range from dc to 250 kc/s (up to 50 kc/s into capacitive load) and will deliver 100 watts continuously at dc. Over the frequency range from 1 cps to 500 kc/s the Amplifier will deliver 50 watts (100 watt peaks) into a 200 ohm resistive load.

The Amplifier provides a choice of three voltage gains as determined by the setting of the INPUT SELECTOR switch; fixed voltage gains of ten (20 db) with no phase reversal or one (0 db) with a phase reversal, or a continuously variable gain (between zero and ten) with no phase reversal by means of the front panel GAIN control. For each gain setting the input may be either direct coupled or capacitor coupled with a low cut-off frequency of 1 cps.

Since the Model DCA-50(R) has a phase reversal in the fixed unity gain position, it can convert a single-ended signal to a balanced signal. Two Model DCA-50(R) Amplifiers can be cascaded to provide a balanced 100 watt output by operating the second Amplifier at unity gain.

The Amplifier output may be either direct coupled (DC) or capacitor coupled (AC) for applications requiring zero output dc level. When the AC output is used, the low cut-off frequency is approximately 25 cps with a 330 ohm resistive load. The output dc level of the direct-coupled (DC) output may be zeroed by the front panel OUTPUT DC LEVEL screwdriver control.

The Model DCA-50(R) is basically a three-stage, direct coupled amplifier. The first two stages are gain stages connected as balanced differential amplifiers for drift cancellation and operated in push-pull to minimize distortion and provide a balanced output. Four series-parallel connected power tubes are used in the power output stage in a unique circuit which provides 50 watts conservatively over an extremely wide frequency range with low distortion which is characteristic of push-pull operation.

When the Amplifier is operated at the maximum gain of ten (20 db) the input is applied to one grid of the first balanced stage and the voltage feedback is applied to the opposite grid. This provides gain with no phase reversal which is typical of voltage feedback amplifiers. To obtain unity gain with a phase reversal, one grid of the first balanced stage is grounded and the junction of an input-output summing network is applied to the opposite grid as in operational feedback amplifiers.

*Patent Pending

2. TECHNICAL SUMMARY

The following data applies only to the direct-coupled (DC) positions of the INPUT SELECTOR switch and direct-coupled (DC) output terminals, unless otherwise specified.

POWER OUTPUT: 50 volt-amperes (100 volt-ampere peaks), continuous, from dc to 250 kc/s into a 330 ohm resistive or inductive load; up to 50 kc/s into capacitive load; 50 watts (100 watt peaks), continuous, from 1 cps to 500 kc/s into a 200 ohm resistive load. Permissible power output below 1 cps is limited with loads under 330 ohms because the output tube plates may overheat during instantaneous plate dissipation peaks. See Figure 11.

OUTPUT VOLTAGE: Greater than 130 volts rms (370 volts peak to peak) open circuit from dc to 500 kc/s; 128 volts rms (365 volts peak to peak) across 330 ohms from dc to 250 kc/s; 100 volts rms (283 volts peak to peak) across 200 ohms from 1 cps to 500 kc/s.

OUTPUT CURRENT: Above 1 cps greater than 550 ma rms (±770 ma peak) through 10 ohms; 500 ma rms (±700 ma peak) through 200 ohms; 392 ma rms (±550 ma peak) through 330 ohms. Below 1 cps 134 ma rms (±185 ma peak) through 10 ohms; 166 ma rms (±230 ma peak) through 200 ohms; 388 ma rms (±550 peak) through 330 ohms.

OUTPUT REGULATION (from no load to full resistive load): Less than 3% from 10 cps to 100 kc/s; less than 6% over the entire frequency range.

INTERNAL IMPEDANCE: Less than 6 ohms from 10 cps to 50 kc/s, less than 15 ohms from dc to 100 kc/s and less than 40 ohms above 100 kc/s.

LOAD IMPEDANCE: Matching, nominal 200 ohms from 1 cps to 500 kc/s, below 1 cps, 330 ohms for full power output. See Figure 8. Minimum load, 10 ohms. See Figure 10.

LOAD POWER FACTOR: Unity to zero, lagging or leading.

OUTPUT DC LEVEL: Zero volts at capacitor-coupled AC OUTPUT terminals; nominal zero volts at the DC OUTPUT terminals.

OUTPUT DC LEVEL STABILITY (typical, after initial warm-up, expressed in percent of peak output voltage): ±0.02% in any one-hour period at fixed line voltage and ±0.1% for ±10% line voltage change in all positions of the INPUT SELECTOR switch except the X10 DC and POT DC positions where ±0.2% and ±0.5% respectively apply.

VOLTAGE GAIN: Maximum of 10, variable continuously, fixed gain of 10 ±10% (20 ±1 db), or fixed gain of 1 ±10% (0 ±1 db) as determined by the INPUT SELECTOR switch. Less than ±0.1 db change in gain for a 10% change in line voltage within the operating range.

FREQUENCY RESPONSE: Flat within ±1 db from dc to 500 kc/s under all specified operating conditions; approximately 3 db down at 800 kc/s. See Figure 10.

PHASE SHIFT (matched load): Zero ±1 degree from dc to 10 kc/s in the X10 and POT positions of the INPUT SELECTOR switch. See Figure 13. In the X1 position, 180 ±1 degrees.

HARMONIC DISTORTION (rms): At full power output, less than 0.3% from 5 cps to 50 kc/s, less than 0.5% from 0.01 cps to 100 kc/s, and less than 5% at 500 kc/s. See Figure 12. DC linearity within ±2% with loads above 200 ohms.

HUM AND NOISE (referred to output): Less than 10 mv with the input shorted and less than 30 mv with open circuit shielded input.

DYNAMIC RANGE: Approximately 85 db.

SQUARE WAVE RESPONSE: See Figure 9.

INPUT IMPEDANCE: Greater than 1 megohm in parallel with approximately 50 uuf in the fixed gain positions; 5000 ohms in parallel with approximately 50 uuf in the variable gain positions.

INPUT COUPLING: Either direct coupling or capacitor coupling with a low cut-off frequency of 1 cps.

INPUT SENSITIVITY: 10 volts rms with a 200 ohms load and 13 volts rms with a 330 ohms load for 50 watts output at maximum gain (X10).

INPUT VOLTAGE LIMITS: 400 volt maximum dc component in the capacitor-coupled (1 CPS) fixed gain positions, combined input signal voltages (ac and dc) must not cause more than 2 watts dissipation in the 5000 ohm GAIN potentiometer in either variable gain position.

AMBIENT TEMPERATURE and DUTY CYCLE: Continuous duty at full 50 watt output up to 50°C (122°F) ambient.

FRONT PANEL CONTROLS:

INPUT SELECTOR switch.
GAIN control.
OUTPUT DC LEVEL control (screwdriver adjust).
QUIESCENT CURRENT control (screwdriver adjust).
POWER ON switch.

TERMINALS: Two multi-purpose binding posts for the INPUT (signal and ground) and three for the OUTPUT (DC signal, AC signal, and ground). The Model DCA-50(R) also has three type BNC coaxial connectors on the rear of the chassis - one for the input, one for the dc output, and one for the ac output.

POWER REQUIREMENTS: 105-125 or 210-250 volts; single phase; 50-60 cycles; 600 watts.

FUSE PROTECTION: Line: 6-1/4 Ampere SLOW-blow. Plate Supply: 3/4 Ampere SLOW-blow.

TUBE COMPLEMENT (furnished with instrument): Four 6DQ5, four 6AS7-GA, two 6CL6, one each: 6AQ5, 12AX7, 5R4-GYA, 6AU5, 6BK7A.

MECHANICAL SPECIFICATIONS:

Overall dimensions: Model DCA-50, 17-1/4" wide, 9" high, 16" deep; Model DCA-50(R), 19" wide, 8-3/4" high, 16" deep. Weight of each, 85 lbs. net, 112 lbs. shipping.

SECTION II - OPERATION

The Model DCA-50(R) Power Amplifier is adjusted and checked carefully in Final Test to insure that it meets all specifications. It is then aged, and again tested prior to shipment to be sure that it is ready for use. The Amplifier is shipped complete and after unpacking is ready to be turned on and used. When rack mounting the Model DCA-50(R), it may be necessary to remove the four rubber bumpers mounted on the bottom dust cover. The recommended operating procedure is described below.

1. CONTROLS

a. POWER - The power off-on toggle switch is marked POWER. In the ON position the Amplifier is completely energized and, after less than one minute warm up, may be used. However, a longer time is required to stabilize the output dc level.

b. INPUT SELECTOR - The INPUT SELECTOR switch permits a choice of six different operating conditions in the switch positions marked DC X10, 1 CPS X10, DC X1, 1 CPS X1, DC POT., and 1 CPS POT.

In the X10 positions, there is a fixed gain of ten with no phase reversal and the input impedance is approximately one megohm.

In the X1 positions, there is a fixed gain of unity with a phase reversal and the input impedance is also approximately one megohm. These X1 positions provide reduced distortion at frequencies below 500 cps, in addition to a more stable output dc level. The phase reversal enables the Amplifier to convert any single-ended signal into a push-pull balanced signal. Two Model DCA-50(R) Amplifiers with the OUTPUT of one connected to the INPUT of the other (operating at a X1 position) will provide a combined push-pull output of 100 watts.

In the POT. positions, there is no phase reversal, the gain is variable up to a maximum of ten as determined by the setting of the GAIN control, and the input impedance is approximately 5000 ohms.

CAUTION

The combined dc plus ac input signals should not dissipate over 2 watts in the 5000 ohms GAIN control which is connected directly across the INPUT terminals in both POT. positions.

In the 1 CPS X10 and 1 CPS X1 positions, the dc components of the input voltage may be as high as 400 volts.

In the three 1 CPS positions, the gain falls off below 1 cps and the output dc level is more stable than in the three DC positions.

c. GAIN - To use the GAIN control, the INPUT SELECTOR switch should be in either of the two positions marked POT. The total gain of the Amplifier is adjustable up to a maximum of ten.

2. LOAD IMPEDANCE

Although the Amplifier may be used with any load of 10 ohms, or more, the rated 50 watt (or volt-ampere) output is obtained reliably from 1 cps to 250 kc/s with any resistive load from 200 to 330 ohms. Below 1 cps a 330 ohm resistive load should be used, and above 250 kc/s a 200 ohm resistive load is recommended. When low-resistance loads are used on the DC OUTPUT, the output dc level should be maintained close to zero.

Output power is excess of rating, limited only by the clipping level, may be obtained without damaging the Amplifier, except at frequencies below 1 cps when the load is less than 330 ohms. These limitations are shown in Figure 11 for a typical Amplifier.

For reactive loads, the impedance level is 330 ohms for full 50 volt-ampere output.

Since 50 watts of average sine-wave power corresponds to 100 watt peaks, the Amplifier will provide 100 watts of dc power continuously into a 330 ohm load with a maximum output swing of ±182 volts. This is illustrated by the curves of Figure 11 which, at dc, show approximately twice the 1 CPS power.

3. LINE VOLTAGE

The Amplifier, as normally shipped, is connected for operation from an ac power source of 105 to 125 volts, 50 to 60 cycles, and uses a 6-1/4 ampere slow-blow line fuse. The Amplifier may be modified for operation from an ac power source of 210 to 250 volts, 50 to 60 cycles, by removing the two jumpers on the four (4) terminal strip, TB340, located on the inside of the chassis directly below the line cord, and adding a jumper between the two center terminals as shown in the Power Supply Schematic, Figure 16. A 3-2/10 slow-blow line fuse should be used for 210-250 volt operation.

A line voltage switch is located on the rear of the chassis. For a line voltage between 105 and 114, this switch should be in the "105-114" position. For a line voltage between 114 and 125, this switch should be in the "114-125" position.

4. TERMINALS

a. INPUT - Two combination-type binding posts are provided on the front panel with the black post grounded. In addition, there is a type BNC input connector on the rear of the chassis.

b. OUTPUT - Three combination-type binding posts are provided on the front panel, one for direct coupling (DC) and one for capacitor coupling (AC) with the middle terminal (GND) grounded. In addition, there are two type BNC output connectors on the rear of the chassis for the direct coupled (DC) and the capacitor coupled (AC) output.

The DC OUTPUT may be used at any frequency. The AC OUTPUT is capacitor coupled to insure zero output dc level and, when it is used, the low cut-off frequency varies with the resistance of the load: approximately 40 cps with a 200 ohm load, 25 cps with a 330 ohm load, 1/4 cps with a 100 K load and 1/5 cps with no load.

If long leads are used between the OUTPUT and the load at high frequencies, the capacitive load of the leads must be considered. At 500 kc/s a shunt capacitance of 200 uuf will reduce the useful power output of the Amplifier approximately 5%.

Reasonable care should be exercised to prevent oscillation caused by stray capacitive coupling of the OUTPUT signal of the Amplifier to the INPUT leads or terminals.

5. TEST JACK VOLTAGE AND OUTPUT DC LEVEL

Adjustments have been made at the Factory for zero output dc level and the correct output-stage quiescent current. The screwdriver controls and corresponding test jacks for the output dc level and quiescent current are on the front panel. With shorted INPUT and the INPUT SELECTOR on DC X10, adjust the OUTPUT DC LEVEL control until the output dc level (as measured across the OUTPUT DC LEVEL test jacks) is zero. This is especially important when using low resistance loads on the DC OUTPUT.

The correct output-stage quiescent current is indicated by a dc reading of minus one volt as measured across the QUIESCENT CURRENT test jacks. Adjust the QUIESCENT CURRENT control until the correct voltage is obtained.

After the Amplifier has had sufficient time to warm up and before extensive use, it is recommended that these readings be checked and the controls readjusted if necessary.

6. FUSES AND INDICATORS

The 6-1/4 Ampere SLOW-blow fuse (used with 105-125 volts line) is mounted on the front panel and is in series with the ac input power. When this fuse is open, the associated blown FUSE INDICATOR will light. A 3-2/10 Ampere SLOW-blow line fuse should be used for 210-250 volt operation.

The 3/4 Ampere SLOW-blow fuse, also on the front panel, is in the ground circuit of the regulated power supplies. When this fuse is open, the associated blown FUSE INDICATOR will light, except under some unusual conditions of input signal and output load.

SECTION III - CIRCUIT DESCRIPTION

The Schematic Diagrams of the Model DCA-50(R) basic amplifier and integral power supply are shown in Figures 15 and 16, respectively. The darker lines on the amplifier schematic show the main signal paths when the INPUT SELECTOR switch is in the DC X10 position.

The basic amplifier circuit consists of three direct coupled push-pull differential balanced stages. The first stage consists of the two halves of V1 connected as a differential amplifier. The second stage, consisting of V2, V3 and V4, is also a differential amplifier and it provides the oppositely-phased drive signals required by the upper and lower series-parallel connected power output tubes, V5, V6, V14, and V15. A cathode follower V16, which drives the screen of V5 and V15, is used to maintain the power output tubes operating properly under varying conditions of output voltage and load impedance. Negative feedback from the Amplifier output is applied to one of the first stage grids.

1. INPUT STAGE

The input stage, V1, is a push-pull common-cathode amplifier. This differential first stage provides drift cancellation as well as two separate isolated high-impedance inputs and two equal-amplitude oppositely-phased plate signals.

The plates of V1 are direct coupled through R106 and R113, to the driver control grids. Above 10 cps, C106 and C108 eliminate the loss due to loading by the dc level-pulling resistors, R116 and R114. These level-pulling resistors are connected to opposite ends of the OUTPUT DC LEVEL control, R115, which is adjusted to obtain zero dc at the output of the Amplifier (with no input) by compensating for unbalance in the two halves of V1.

2. DRIVER STAGE

The driver stage consists of V3 and V4 with a common cathode connection for differential amplification. V2 is used to modify the plate signal of V4. The differential action, in conjunction with compensating circuits, helps to maintain the grid to cathode of the output tubes at equal amplitude and with opposite phase.

To maintain balanced push-pull operation of the output tubes under all conditions and to obtain good distortion cancellation, it is important that the upper tubes, V6 and V14, be driven so that it will operate as an amplifier (as does V5 and V15) and not as a cathode follower. This operation is approximated by connecting the plate resistor, R124, of V3 to the cathode of V2 which has a signal nearly the same as that on the cathode of V6 and V14 (the gain of V2, as a cathode follower, should ideally be unity). Thus, most of the signal developed across R124 by V3 plate current is applied between grid and cathode of V6 and V14.

3. OUTPUT STAGE

The output tubes, V5, V6, V14 and V15, are series-parallel connected but function as a class AB push-pull amplifier. For low amplitudes the

output is proportional to the difference between the grid signals as in a differential amplifier. For the peak swings of large signals, one of the tubes is cut off and the output is determined by the signal on the grid of the other tube. Push-pull operation of these series-connected output tubes gives even-harmonic distortion cancellation because the tubes are connected and driven so as to obtain identical operation.

All output tubes are operated as pentodes. The screen grid of V5 and V15 is supplied with approximately 150 volts from the cathode follower V16. To maintain constant screen to cathode potential in V6 and V14, the screen supply is "floated" by connecting its negative terminal to the cathode of V6 and V14. This "floating" supply employs L340 and L341 to isolate the stray capacities of the transformer, T340, and associated circuitry from the cathode of V6 and V14 at high frequencies. Resistors R340A and R340C are used to suppress undesired resonances.

4. OVER-ALL FEEDBACK NETWORK

The Feedback Network components are shown inside the dash rectangle on the Schematic Diagram, Figure 15. A part of the signal at the cathode of V6 and V14 is fed back to the grid of V1B. Three different paths are provided: one at low frequencies, one at mid frequencies, and one at high frequencies. Their cross-over frequencies correspond to gain changes in the open-loop amplifier response which rises in the region between 3 and 9 cps due to C106 and C108, and changes again in the vicinity of 2 kc/s due to C127, C125. Small gain changes are introduced in the feedback network at these frequencies to compensate for the amplifier gain changes and thus obtain a flat closed-loop response. The low-frequency feedback path is made up of R206, adjusted by R207, with R204 from V1B grid to ground. C204 brings in the mid-frequency path through R208 with R205 to ground. At high frequencies the feedback gain is mainly determined by trimmer C206.

R202, R203 and trimmer C202 are used at the low, mid and high frequencies respectively as described in SECTION III - 5. The main function of these components is to provide an input signal path in the X1 positions.

5. INPUT SELECTOR SWITCH

The INPUT SELECTOR switch, S101, in Figure 15 is effectively a four-pole six-position rotary switch. The front wafer consists of S101A and S101B and the rear wafer consists of S101C and S101D. The circuit arrangements for each of the positions, as shown in the Simplified Schematic Diagrams of Figures 2 and 3, are as follows:

In the DC X10 position, the amplifier INPUT is connected by S101B through R103 to the grid of V1A, as shown in Figure 2. Sections S101C and S101D ground two legs of the feedback network so that approximately one-tenth of the amplifier output signal is applied to the grid of V1B. The balanced differential output of V1 is applied to the balanced drivers, V3 and V4. Their output is fed to the output tubes, V5, V6, V14 and V15. Actually, some of the V1 plate signals, representing the difference between the input and part of the output, is the distortion of the output which is amplified and

degenerates the distortion developed in the output tubes and drivers. The amplifier gain is ten and the OUTPUT is in phase with the INPUT, because the first stage is used as a differential amplifier.

In the 1 CPS X10 position, as shown in Figure 2, the amplifier circuitry is the same except for the introduction of capacitor coupling. The INPUT is coupled through C101. Capacitors C201 and C205 are connected in series with the feedback path to ground to increase the feedback gain below 1 cps. This improves the dc stability of the OUTPUT by a factor of approximately 10.

The DC and 1 CPS POT. positions of S101 utilize the same circuitry as the respective X10 positions except that the INPUT is connected first through the GAIN potentiometer, R101. This potentiometer is not isolated from dc connected to the INPUT.

In the DC X1 position of S101, the circuit is changed considerably as shown in Figure 3. S101D grounds the grid of V1A through R103. The INPUT is connected to the previously grounded ends of R202, R203 and C202 in parallel with C203. The signal appearing on the grid of V1B is obtained by adding the INPUT and the OUTPUT signals through approximately equal feedback network resistors. The amplifier gain is unity and the OUTPUT is out of phase with the INPUT because the feedback voltage is added to the input voltage through a passive network.

The Amplifier closed-loop gain is actually determined by the ratio of R208 to R203 at mid frequencies, the ratio of R206 plus R207 to R202 at low frequencies, and the ratio of C206 to C202 at high frequencies. C109 remains connected to ground to improve stabilization by maintaining the same high-frequency loop gain as was obtained in the X10 positions. However, at low and mid frequencies the benefits of higher loop gain are obtained by not grounding R204 and R205. In the 1 CPS X1 position of S101, the Amplifier circuits are the same as in the DC X1 position except that capacitor C201 is connected in series with the INPUT.

6. POWER SUPPLY

The power supply for the Model DCA-50(R) furnishes the amplifier circuit with three unregulated dc voltages, two load-regulated dc voltages and five unregulated ac heater voltages. Three separate power transformers, T301, T340 and T350, are used in this power supply.

One of the unregulated dc voltages is a "floating" 175 volt screen grid supply for V6 and V14. Since its negative end is connected to the cathodes of V6 and V14, it provides a fixed screen grid to cathode voltage while the cathodes swing with the output signal. The supply uses full-wave rectifier, V13, whose output is filtered by C340 and C341.

The other two unregulated dc supplies, plus (+) 265 and minus (-) 615 volts, are obtained from a single 880 volt dc supply with a grounded tap at the junction of R355 and R356 and of C355 and C354B. The 880 volt dc supply uses a full-wave rectifier tube, V7, whose output is filtered by a

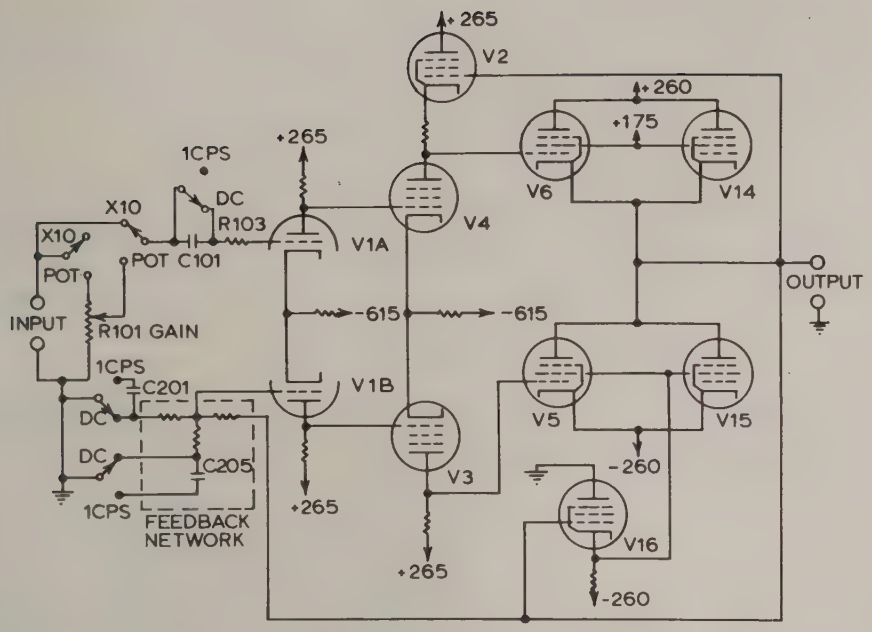

Figure 2 - Simplified Schematic for the DC X10, 1 CPS X10, DC-POT and 1 CPS-POT Positions.

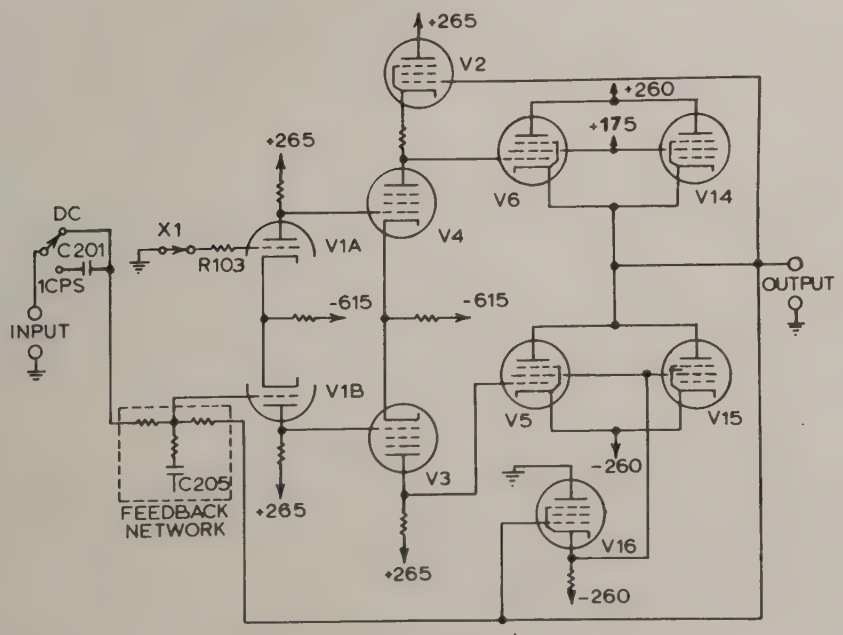

Figure 3 - Simplified Schematic for the DC X1 and 1 CPS X1 Positions.

capacitor-input filter, consisting of C354A, L354 and C355 in series with C354B. The +265 and -615 volt dc supplies, which are used for V1, V2, V3 and V4, have nearly all their load current drawn from +265 directly to -615. The current drawn through the grounded tap established by R355 and R356 is small and produces very little change in these voltages.

The two load-regulated dc supplies, plus (+) 260 and minus (-) 260 volts, are nearly identical and only the +260 volt supply will be discussed in detail. The unregulated dc source uses a full-wave semiconductor rectifier, CR301 to CR304, the output of which is filtered by a simple capacitive filter consisting of C301 and C302. A conventional series-type degenerative regulator with a single-stage triode amplifier is used. V8 and V10 are used as the series tubes and V9A is the amplifier stage.

Five different ac heater windings are required to accommodate the widely different cathode potentials in this type of amplifier circuit to assure low heater to cathode voltage on all tubes.

S360 is the main POWER switch. A neon FUSE INDICATOR, DS360, is connected across the ac line fuse, F360, through a current limiting resistor, R360, so that the neon glows when F360 is open. DS335, F335 and R335 in series with the common ground lead of the two load-regulated supplies function in a similar manner. When F335 is open, its blown FUSE INDICATOR, DS335, will light except under some unusual conditions of input signal and output load. See MAINTENANCE, SECTION IV-1.

Interlock switch S301, located on the rear, opens when the chassis is removed from the cabinet, disconnecting the fan, B301. This fan has a 115 volt ac motor and must always remain connected across one of the two 115 volt primaries of T301. Similarly, T340, which has a single 115 volt primary must always remain connected across the other 115 volt primary of T301.

Movable jumpers are arranged so that the primaries of transformer T301 and T350 can be used in parallel for 115 volt operation or in series for 230 volt operation. For 230 volt operation the jumpers from terminals 1 to 2 and from 3 to 4 of the terminal strip TB340 are removed and terminal 2 is jumpered to terminal 3, shown as a dash line on the Schematic Diagram, Figure 16. With this connection, fan B301 is in series with the primary of transformer T340 across the 230 volt source. T301 and T350, acting as autotransformers, maintain 115 volts across each of these components.

The primaries of the power transformers T301 and T350 are tapped to compensate for low line voltage. For a line voltage between 105V and 114V, the line voltage switch located in the rear of the chassis should be in the "105-114" position. For a line voltage between 114V and 125V, the switch should be in the "114-125" position.

SECTION IV - MAINTENANCE

All the components in the Model DCA-50(R) are of the highest quality and should have a long trouble-free life since they are operated well below their manufacturer's rating. If the Amplifier is not functioning properly and requires maintenance, the following simplified procedure in the order described may facilitate locating the source of trouble. In the Model DCA-50(R) the chassis and attached front panel and frame can be pulled out through the front of the cabinet after the four screws in the rear of the cabinet are removed. Figure 14 shows the top and bottom view of the Model DCA-50(R) with the location of the major components.

1. FUSE FAILURE

There are two fuses on the front panel of the Model DCA-50(R). The 6-1/4 Ampere SLOW-blow fuse (3-2/10 Ampere SLOW-blow for 210-250 volt operation) is used in the primary circuits of the transformers to protect the power supply components from short circuits. A 3/4 Ampere SLOW-blow fuse is used to protect the Amplifier components. The rating of these fuses was selected for the proper protection of the Amplifier and they should be replaced with the same type and rating.

The 3/4 Ampere SLOW-blow fuse is in the ground circuit of the plus (+) 260 and minus (-) 260 volt regulated power supplies. When this fuse is blown, the associated blown FUSE INDICATOR will light except under the following unusual conditions:

a. When the output load is less than 1000 ohms and there is an overloading (clipping) output signal at frequencies above 20 kc/s.

b. For any output load there is a negative output dc level at which this FUSE INDICATOR will not light but this voltage range is small, and at all other output levels the indicator works satisfactorily.

The Amplifier will still function under some conditions when the 3/4 Ampere SLOW-blow fuse is blown but its performance is impaired at frequencies below 1 kc/s. With a sine-wave input the Amplifier output signal from 100 cps to 1 kc/s will appear sinusoidal even with 50 watts out, but the distortion below 1 kc/s is higher and may increase to one percent at 100 cps. The maximum power output is greatly reduced at frequencies above 100 cps. The Amplifier can furnish output power at frequencies above 100 cps with this fuse blown because the signal current is supplied by the output capacitors, C334 and C335, which are across the +260 and -260 volt regulated supplies.

If a 3/4 Ampere fuse failure is detected, the following precautions are recommended before turning the Amplifier on after replacing the fuse:

a. If the Amplifier output current exceeds the rated 550 ma rms at frequencies below 5 kc/s, the 3/4 Ampere fuse may blow.

b. When a low dc impedance load is used, a small dc output level unbalance may cause excessive output current and contribute to the fuse failure.

c. In the DC positions of the INPUT SELECTOR switch an excessive input dc level may cause a fuse failure.

d. Short circuits in the filter capacitors, C334 and C335, can best be detected by connecting an ohmmeter across the terminals directly.

e. A fuse failure may be caused by a defective tube.

If a 6-1/4 Ampere fuse failure is detected, the following procedure is recommended before turning the Amplifier on after replacing the fuse:

a. Check for a faulty rectifier tube, V7.

b. Short circuits in the filter capacitors, C301, C302, C303, C304, C313, C314, C354, C355, C334 and C335 used in the power supplies, can best be detected by connecting an ohmmeter across the terminals directly. Short circuits across C301, C302, C303 and C304 may be due to either a defective capacitor or a defective semiconductor rectifier. See SECTION IV-4.

2. TUBE REPLACEMENT

Before any detailed maintenance procedure, turn on the Amplifier and then check to make certain that the correct tubes are inserted properly in their respective sockets. The type number of each tube is marked on the chassis adjacent to the tube. At the same time note if the filaments of all the tubes are lit and replace any that fail to light.

If this procedure produces no results, the most likely source of failure is the electron tubes since they have an inherently shorter life. Obtain appropriate new tubes and then, one at a time, substitute the new tube in each position in the Amplifier where it is used.

When any of the tubes are replaced, it is recommended that the quiescent current and output dc level be checked and readjusted if necessary. See OPERATION, SECTION II-5.

In most cases, the above procedure will localize a malfunction in the Model DCA-50(R) when it ceases to function or fails to operate within its rated specifications.

If the above procedure has not isolated the malfunctions, the following step-by-step procedure is presented to permit a thorough detailed evaluation of the Amplifier performance.

This maintenance procedure consists of two major parts. The first part, sub-headings 3 and 4, deals with the power supply which is shown in Figure 16 and the second part, sub-headings 5 and 6, encompasses the amplifier proper as shown in Figure 15. Although it is recommended that this procedure be used in the order presented, occasionally depending on the nature of the malfunctions, a considerable saving of time may be realized by omitting sub-headings 3 and 4 and proceeding to sub-headings 5 and 6 if

routine voltage measurements indicate that the five high-voltage supplies are functioning properly.

This Amplifier uses a large number of parasitic suppressor resistors. To insure that these resistors are checked, it is recommended that the tube voltages and resistances be measured directly at the pin of each socket.

This procedure applies for 105-125 volt operation. For 210-250 volt line voltage the appropriate line voltages and currents should be modified by a factor of two.

3. POWER SUPPLY DESCRIPTION

A brief circuit description of the power supply is presented to provide the information required for maintenance. For a more detailed description of the power supply refer to CIRCUIT DESCRIPTION, SECTION III.

The Model DCA-50(R) power supply, as shown in Figure 16, provides five high-voltage dc power supplies. Two of the high-voltage supplies are load regulated and three are unregulated.

The +260 volt and -260 volt regulated supplies, both referred to chassis ground, are used to power the first and second stages of the amplifier. A full wave rectifier, V7, is used to generate approximately 880 volts across the input filter capacitor, C354. After additional filtering by L354, C301 and C355, the +265 volt and -615 volt supplies, referred to ground, are established by grounding the junction of C355 and C354B and the junction of R355 and R356.

Two load-regulated supplies of +260 volts and -260 volts, with respect to chassis ground, furnish the plate supply power for the four series-parallel connected output tubes, V5, V6, V14 and V15, and the screen supply for the lower power output tubes, V5 and V15. The +260 and -260 volt load-regulated power supplies use full-wave semiconductor rectifiers, CR301-CR304 and CR305-CR308, with capacitor input filters, C301, C302, C303 and C304, respectively. Each supply uses two dual power triodes, V8, V10, V11 and V12, as series regulators and one section of the dual triode amplifier, V9, as a regulating amplifier.

A floating power supply of 175 volts is used to supply the screen power of the upper power output tubes, V6 and V14. The negative return of this supply is connected to the cathode of V6 and V14. This floating supply consists of a full-wave rectifier, V13, and a capacitor-input filter, C340. A separate transformer, T340, is used.

4. POWER SUPPLY MAINTENANCE

For this maintenance procedure the following test equipment is required:

1. Vacuum-tube volt-ohmmeter with input resistance greater than 10 megohms.

2. General purpose oscilloscope.

3. Variable autotransformer of 10 ampere capacity.

4. Ammeter with full scale sensitivity of 10 amperes ac.

5. Four power resistors with a resistance tolerance of ±5% are required: two resistors rated at 2.25K, 60 watts; one resistor rated at 3.15K, 40 watts; one resistor rated at 8K, 100 watts.

Disconnect the power cord of the Model DCA-50(R) from the power receptacle and remove all electron tubes, V1 through V16, but do not disturb the semiconductor rectifiers, CR301 through CR308. Switch the line switch in the rear of the chassis to the "114-125" position.

a. Measure the resistance across the four 120 uf electrolytic capacitors, C301 to C304. The resistance* across C301, C302, C303 and C304 should be approximately 200K-250K. The most likely source of trouble, if these readings are incorrect, is the capacitors or the semiconductor rectifiers CR301 through CR308.

b. With all tubes in place, measure the resistance across the floating screen supply. This resistance, which can be measured most easily from pin 4 to pin 6 of V6, should be approximately 6.8K. The most likely source of trouble, if this reading is incorrect, is the filter capacitors C340 and C341, or the rectifier tube V13.

c. Plug the power cord of the Amplifier into an autotransformer with an ac ammeter of 10 amperes full scale in series with the Amplifier power cord. Set the autotransformer for zero ac volts out and turn on the POWER-ON switch of the Amplifier. Increase the autotransformer slowly towards 115 volts while observing the ammeter. In the Model DCA-50(R), under normal conditions at a 115 volt line with all the electron tubes removed, the ammeter should read approximately 0.45 amperes. When the fan motor is activated by pressing the safety interlock push-button switch, S301, located in the rear of the chassis, the ammeter should read approximately 0.67 amperes.

If the ammeter reads appreciably above the correct value, turn the Amplifier off for there is an internal short circuit in either the transformer, T301, T340 or T350, or there is a short circuit in the primary or secondary external wiring of the transformers.

---

*The resistance value obtained from this measurement will depend on the type of ohmmeter used because of the semiconductor rectifiers CR301 through CR308. With ohmmeters using an internal battery the correct reading is approximately 100K if the positive end of this battery is connected to the positive terminal of C301 to C304. When the ohmmeter leads are reversed, an incorrect and appreciably lower reading will be obtained. With most vacuum tube ohmmeters these measurements will vary only by a small amount when the leads are reversed.

d. Turn the Amplifier off and measure the resistance from the +265 and -615 volt unregulated supplies to ground. The resistance should be approximately 13K and 21K, respectively. If these readings are incorrect, or a short circuit is indicated, the most likely source of trouble is R355, R356, C354, C355, L354 or associated wiring. If these components are not defective, the most likely source of trouble is a component associated with V1, V2, V3 or V4. The resistance readings of these tubes as shown in the VOLTAGE AND RESISTANCE CHART should be checked.

e. Insert only the rectifier tube, V7, and connect an external power resistor of 3.75K with a 40 watt minimum rating from the +265 volt unregulated supply to chassis ground and an external power resistor of 8K with a 100 watt minimum rating from the -615 volt unregulated supply to chassis ground. These two external power resistors approximate the amplifier load on the +265 and -615 volt unregulated supplies in its normal quiescent condition with no input signal.

At a line voltage of 115 volts the ac line current should now be approximately 1.68 amperes and the unregulated supply voltages should be approximately +265 and -615 volts. The hum and ripple of these supplies should not exceed 120 and 430 millivolts rms respectively and the ripple frequency of each supply should be predominantly twice the line frequency. If these voltages are incorrect, the most likely source of trouble is the value of C354, C355, L354, the rectifier tube V7 or the secondary of transformer T350.

f. Turn the Amplifier off and measure the resistance from the +260 and -260 volt load-regulated supplies to chassis ground. The resistance of each should be approximately 6.4K. If these readings are incorrect or a short circuit is indicated, the most likely source of trouble is R334, R319, C334, C335 or associated wiring.

g. Insert the current regulator tubes V8, V10, V11 and V12, and the regulating amplifier tube, V9. Connect two external power resistors of 2.25K with a 60 watt minimum rating from the +260 and the -260 volt load-regulated supplies to chassis ground. These two external power resistors approximate the amplifier load on the load-regulated +260 and -260 volt power supplies in normal quiescent condition with no input signal. Be sure that the external 3.15K and 8K power resistors are connected to the +265 and -615 volt unregulated supplies and that these voltages are approximately correct because the magnitudes of the +260 and -260 volt load-regulated supplies are determined by the magnitude of the -615 volt unregulated supply. This is accomplished in the circuit design by connecting the voltage determining precision resistors, R318 and R320, to the -615 volt supply. The +260 and -260 volt load-regulated supplies are therefore "slaved" to the -615 volt unregulated supply and will vary with line voltage.

At a line voltage of 115 volts the ac line current should now be approximately 3.5 amperes. If the -615 volt unregulated supply is approximately correct, the load-regulated supplies will be approximately +260 and -260 volts. The hum and ripple of these supplies should not exceed 40 millivolts rms and the ripple frequency of each supply should be predominantly twice the line frequency. If these voltages are incorrect, the most likely source of trouble is the electron tubes V8, V9, V10, V11 or V12, the precision resistors R317, R332, R318, R320 and R333, R337, R336, R338 or the capacitors C317 and C334.

h. Leave the four power resistors connected as previously. Insert the rectifier tube V13 and measure the voltage and ripple of the floating screen supply directly across R340B or C341. At a 115 volt line this voltage should be approximately +175 volts and there should be less than 0.6 volt rms saw-tooth ripple at twice the line frequency. If these voltages are incorrect, the most likely source of trouble is C340, C341, V13, T340, L340 or L341. Each of the chokes, L340 and L341, has a dc resistance of approximately 30 ohms.

This completes the evaluation of the five high-voltage power supplies. Before removing the four external power resistors, measure the five low-voltage unregulated ac heater supplies of transformer T350. The correct voltages are shown adjacent to each winding.

Before continuing with the remainder of this maintenance procedure, disconnect all the external power resistors and insert all the tubes except the power output tubes, V5, V6, V14 and V15.

5. AMPLIFIER DESCRIPTION

A brief circuit description of the amplifier proper is presented to provide the information required for maintenance. For a more detailed analysis refer to CIRCUIT DESCRIPTION, SECTION III.

The Model DCA-50(R) is basically a three-stage direct-coupled amplifier. The first stage, V1A and V1B, and the second stage, V3 and V4, are gain stages connected as balanced differential amplifiers operated in push-pull to provide a balanced output. Four series-parallel connected power output tubes, V5, V6, V14 and V15, are used in the power output stage. A cathode follower, V2, provides a plate supply voltage for V4 with a superimposed signal voltage derived from the cathode of V6 and V14. A cathode follower, V16, supplies the proper ac and dc signals for the output tubes V5 and V15.

When the Amplifier is operated at the maximum gain of plus ten (20 db), the input is applied to the grid of V1A. The voltage feedback is applied to the grid of V1B via the feedback network to produce positive gain. To obtain minus unity gain the grid of V1A is grounded and the junction of the input-output feedback network is applied to the grid of V1B.

6. AMPLIFIER MAINTENANCE

For the following maintenance procedure a vacuum-tube voltmeter with input resistance greater than ten megohms is required.

a. Turn the Amplifier off and check that all the tubes except V5, V6, V14 and V15 are inserted in their respective sockets. Connect the grid of V1B to ground, set the INPUT SELECTOR to the DC POT. position and turn the GAIN control to the maximum ccw position. Connect the DC OUTPUT terminal to the GROUND terminal or chassis ground to permit the cathode follower, V2, to function properly with V5, V6, V14 and V15 removed.

b. Set the autotransformer to zero ac volts out and turn the Amplifier on. Increase the autotransformer output slowly towards 115 volts while observing the ammeter. Under normal conditions the ammeter should read approximately 1.68 amperes and the two unregulated supplies should be approximately +265 and -615 volts, respectively. If these voltages are incorrect and these supplies have been checked out (as recommended in Power Supply Maintenance in Section IV-4) and found correct, a discrepancy in these voltages now indicates a short circuit or a defective component in the first two stages of the amplifier.

c. Measure the dc plate voltage of V1A and V1B. Each should be approximately 165 volts. The most likely source of trouble if these readings are incorrect is the +265 or -615 volt unregulated supplies, the electron tube V1A or the components associated with the first stage. Be sure that both grids of V1 are at chassis ground potential and that L101 is not open. If necessary check the resistance readings as shown in the VOLTAGE AND RESISTANCE CHART in Figure 17.

d. Measure the dc voltages directly on the grids of V3 and V4. Each should be approximately -370 volts. Measure the grid-to-grid dc voltage of V3 and V4. When the dc feedback is interrupted, as it is with V5, V6, V14 and V15 removed, this voltage depends on the setting of the front panel OUTPUT DC LEVEL screwdriver control. If this control is adjusted from minimum to maximum the grid-to-grid dc voltage should vary from approximately -7.5 to +8 volts minimum. The most likely source of trouble if these voltages are incorrect is the -615 volt unregulated supply, the precision resistors R106, R114, R116, grid suppressor resistors R127, R134, capacitors C106, C108 or the OUTPUT DC LEVEL potentiometer, R115.

e. Measure the dc plate voltage of V4. This voltage should vary from approximately -140 volts to +257 volts as the OUTPUT DC LEVEL control is adjusted from minimum to maximum. If these voltages are incorrect, the most likely source of trouble is the electron tubes, V2 or V4, the components associated with V2, the plate load components R124, R125 and L121, the common screen dropping resistor R129, the screen suppressor resistors R128 and R132, the common cathode resistor R130, and the QUIESCENT CURRENT screwdriver control R131. If the dc plate voltage of V4 is greater than -100 volts, check that the DC OUTPUT terminal has been grounded.

f. Measure the common screen and cathode voltage of V3 and V4. The screens should be at approximately -160 volts and the cathodes at approximately -360 volts. If necessary, check the resistance readings of V3 as shown in the VOLTAGE AND RESISTANCE CHART, Figure 17.

g. Measure the dc plate voltage of V3. This voltage should vary from approximately +240 to -230 volts as the OUTPUT DC LEVEL control is adjusted from minimum to maximum. If this voltage is incorrect, the most likely source of trouble is the electron tubes V3 and V4 and the plate load components R139, C127, R138 and L122. If necessary check the resistance readings of V3 as shown in the VOLTAGE AND RESISTANCE CHART, Figure 17.

h. Measure the dc grid voltage of V6 and V14. This voltage should vary from approximately -140 volts to +25 volts as the OUTPUT DC LEVEL control is varied from minimum to maximum. If these voltages are incorrect, the most likely source of trouble is the grid suppressor resistors R152 or R154.

i. Measure the dc grid voltage of V5 and V15. This voltage should vary from approximately -200 volts to -335 volts as the OUTPUT DC LEVEL control is varied from minimum to maximum. If these voltages are incorrect, the most likely source of trouble is the plate-to-grid coupling network components R133, R136, R169, L122, R135, R144, R164, R165, C155, C156, C125, and diode CR120. If necessary, check the resistance reading of V3, V5 and V15 as shown in the VOLTAGE AND RESISTANCE CHART, Figure 17.

j. Adjust the OUTPUT DC LEVEL control until the plate voltage of V3 is at approximately -50 volts. Measure the screen voltage of V5 and V15. This voltage should be approximately -100 volts. If this voltage is incorrect, the most likely source of trouble is in the cathode follower V16 or associated components, or the screen grid suppressor resistors R162 and R163.

k. Turn the Amplifier off and set the autotransformer to zero. Remove the connection from the DC OUTPUT terminal to ground and the connection from the grid of V1B to ground. Insert the power output tubes, V5, V6, V15 and V14, and be sure to replace their plate caps. Turn the Amplifier on and increase the autotransformer output slowly towards 115 volts while observing the ammeter. Under normal conditions, with the quiescent control adjusted as outlined in OPERATION, SECTION II-5, the ammeter should read approximately 4 amperes. If the ammeter reads appreciably above this value, turn the Amplifier off.

If the line current is excessive, the most likely source of trouble is one of the power output tubes, V5, V6, V14, and V15, a short circuit from the DC OUTPUT terminal to ground, or a defective feedback network. If the power output tubes are checked and found satisfactory or new tubes are substituted and the trouble persists, remove the power output tubes, short the DC OUTPUT terminal to ground, and turn on the Amplifier. Measure the screen grid voltages of V5, V6, V14 and V15. The dc screen grid voltage of V6 and V14, as measured between pins 8 and 3, should be approximately +175 volts. The dc screen voltage of V5 and V15, as measured between pins 8 and chassis ground should be approximately -100 volts.

Turn the Amplifier off and check the plate cap resistors, R150, R151, R160 and R161, that are molded into the plate cap, and check the plate leads

for continuity. Disconnect any external load on the Amplifier OUTPUT terminals and measure the resistance from the DC OUTPUT terminal to chassis ground. Under normal conditions this resistance should be approximately 50K - 200K, depending on the polarity and voltage of the internal battery of the ohmmeter and the shunting effect of the diode CR120. If this resistance reading is incorrect, check the resistance readings of V5, V6, V14 and V15 as shown in the VOLTAGE AND RESISTANCE CHART, Figure 17.

1. Insert the power output tubes, V5, V6, V14 and V15, turn the Amplifier on and set the INPUT SELECTOR switch to the DC X10 position. After sufficient warm up time, adjust the OUTPUT DC LEVEL control to approximately zero volts and then adjust the QUIESCENT control for -1 volt. If these voltages cannot be obtained, turn the Amplifier off and measure the resistance from the DC OUTPUT terminal to the grid of V1B and also from the grid of V1B to chassis ground. These resistances will depend on the setting of the INPUT SELECTOR switch and should vary between approximately 0.5 and 3 megohms. If these readings are incorrect, check the wiring and components associated with the feedback network shown in Figure 16.

7. AMPLIFIER GAIN VS. FREQUENCY

The Amplifier maintenance procedure up to this point should uncover defects which disturb the quiescent (no input signal) operating potentials. If the Amplifier fails to meet its rated specification (see SECTION I) when all the quiescent potentials are correct and all the tubes have been tested or replaced, it is advisable to take an open-loop frequency response curve of the amplifier and a response curve of the feedback network.

The following test equipment will be required to make these measurements:

1. Sine-wave generator with 1 volt rms maximum output over the frequency range from 100 cps to 5 mc/s.

2. Vacuum-tube voltmeter (with a probe of 10 uuf maximum input capacitance and 10 megohms minimum input resistance) having 0.01 volt minimum full scale sensitivity over the frequency range from 10 cps to 5 mc/s.

3. Oscilloscope with a band width of 5 mc/s minimum and probe with 10 uuf maximum input capacitance and 10 megohm minimum input resistance.

4. Non-inductive 200 or 330 ohm resistor with a 100 watt minimum rating (a series and/or parallel combination of suitable 2 watt carbon resistors can fulfill this requirement).

5. Capacitor of 0.1 uf with 200 VDC minimum rating.

6. Capacitor of 100 uf with 100 VDC minimum rating.

To take an open-loop response of an amplifier, it is necessary to interrupt the feedback path. This can be accomplished most easily in this

direct-coupled Amplifier by connecting a capacitor from the feedback grid of the first-stage balanced amplifier, V1B, to ground. The dc levels and quiescent tube voltages will not be disturbed because this capacitor interrupts only the ac feedback path, permitting the dc feedback to function.

Set the INPUT SELECTOR switch to the 1 CPS POT. position with the GAIN control in the maximum CW position and short circuit the INPUT of the Amplifier. Connect a 100 uf oil or paper capacitor with a 100 VDC or higher rating from the grid of V1B to chassis ground and a 200 or 330 ohm non-inductive resistor with a 100 watt minimum rating from the AC or DC OUTPUT terminals to ground. To eliminate hum on open-loop measurements at frequencies above kc/s, the 100 uf capacitor can be changed to a 0.1 uf capacitor.

Turn the Amplifier on and, after a sufficient warm up period, check the quiescent current and OUTPUT DC LEVEL as described in OPERATION, SECTION II-5. Remove the short circuit from the INPUT of the Amplifier and apply a 0.1 volt signal to the INPUT terminals of the Amplifier. Measure the output voltage of the Amplifier with the vacuum-tube voltmeter and monitor the output of the Amplifier with the oscilloscope to make sure that the output is similar to the input. Figure 4 shows a typical open-loop frequency response curve of a Model DCA-50(R) Amplifier when functioning normally. The open-loop gain should be approximately 100 kc/s. At 500 kc/s, the gain should be approximately 20 db.

If, after careful evaluation, it is believed that the basic amplifier is functioning properly and the open-loop response is typical, as shown in Figure 4, it is recommended that a response curve of the feedback network be taken.

Turn the Amplifier off, remove the 200 or 330 ohm resistor and the 100 uf or 0.1 uf capacitor used for open-loop measurements. Apply a 1 volt rms signal to either the AC or DC OUTPUT terminal. Measure the voltage at the output of the feedback network at the grid of V1B. A typical response curve of a feedback network is shown in Figure 5. The gain is approximately 0.1 (-20 db) and is constant within 2 db from dc to 30 kc/s, rising to 0.16 (-16 db) at approximately 1.3 mc/s. Slight variations of approximately 1/4 db at the crossover frequencies (as described in CIRCUIT DESCRIPTION, SECTION III) will occur, if carefully observed in this response curve.

If the response curve deviates appreciably from typical, the most likely source of trouble is one of the components in the feedback network which is shown on the Amplifier Schematic Diagram, Figure 15. The likeliest component to fail in the feedback network is one of the precision deposited carbon resistors R202, R203, R204, R205, R206 and R208. With the INPUT SELECTOR switch in the 1 CPS X10 position, the resistance as measured across each of these resistors would be 2, 1.5, 0.62, 0.2, 1.5 and 2.2 megohms respectively. R201 and R111 are adjusted at the Factory and should be between 1 - 10K and 100 - 1000 ohms, respectively.

If necessary, check the feedback network capacitors C202, C204, C205 and C206. If C202 and C206 are defective and replaced, or the trimmers C202 and C206 have been tampered with, it will be necessary to readjust these

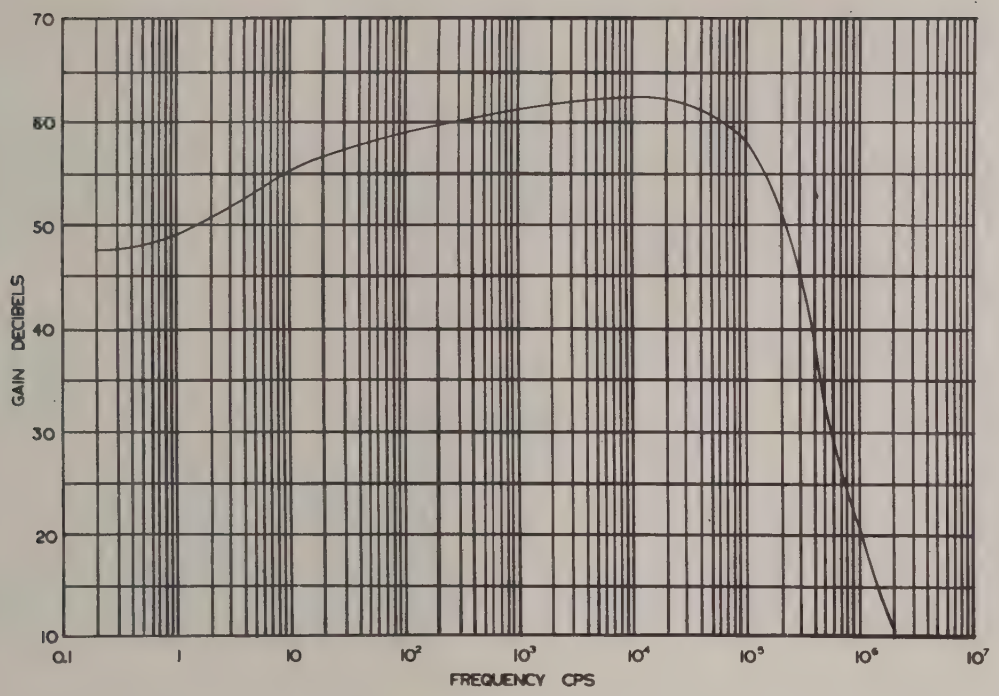

Figure 4 - Open-Loop Amplifier Frequency Response.

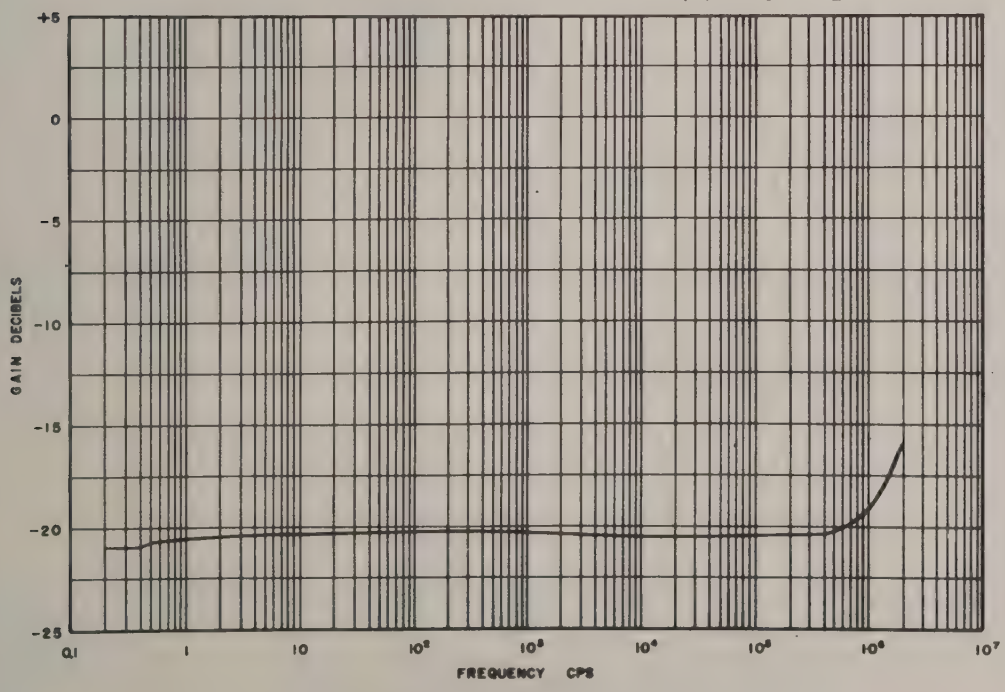

Figure 5 - Open-Loop Feedback Network Response.

trimmers as described in the PERIODIC CALIBRATION AND ADJUSTMENT, SECTION V.

8. AIR FILTER

The Model DCA-50(R) obtains air for cooling through an air filter that is mounted in the rear of the Amplifier. This filter should be inspected periodically, and cleaned or replaced when necessary. The air filter may be cleaned in warm water and detergent and, after drying, should be coated with a suitable oil adhesive.

SECTION V - PERIODIC CALIBRATION and ADJUSTMENT

Under normal laboratory conditions the Model DCA-50(R) should function without requiring any maintenance since high-quality components are used throughout and all are operated well within their manufacturers' ratings. Since the Amplifier uses electron tubes whose performance deteriorates with time, it is recommended that a routine check be made after approximately 500 hours' operation to ensure that the Amplifier is performing in accordance with its specifications. The Amplifier will not incur any permanent damage if this routine 500-hour maintenance is not performed.

Whenever any tubes in the Model DCA-50(R) are replaced, it is recommended that both the output dc level and quiescent current be adjusted. Short circuit the INPUT terminals and set the INPUT SELECTOR switch to the DC X10 position. After allowing sufficient warm up time, adjust the front panel OUTPUT DC LEVEL screwdriver control, until the output dc level, measured between the test jack adjacent to the OUTPUT DC LEVEL control and chassis ground test jack is zero. Then adjust the QUIESCENT CURRENT screwdriver control until the voltage measured between the test jack, adjacent to the QUIESCENT CURRENT control, and chassis ground test jack is minus 1 volt. After adjusting QUIESCENT CURRENT, recheck the OUTPUT DC LEVEL and readjust if necessary. In the event that these voltages cannot be adjusted to their correct values, refer to MAINTENANCE, SECTION IV.

If the Amplifier appears to be functioning properly, it is recommended that the feedback network trimmers, R207, C202 and C206 be adjusted to ensure that the Amplifier frequency response is within specification. This can be accomplished by checking the square wave response of the Amplifier. The three trimmers are mounted on the large terminal board which is positioned underneath the chassis parallel to the front panel.

For this procedure the following test equipment is required:

a. General purpose ac-dc oscilloscope.

Make sure that the oscilloscope will pass a 2 cps square wave without any appreciable tilt or that the vertical amplifier is in the direct-coupled (dc) position.

b. Square wave generator covering the frequency range from 2 cps to 1 kc/s.

c. Load resistor of 500 ohms $\pm 5\%$ with one watt minimum rating.

d. Variable autotransformer of 10 ampere capacity.

Turn the Amplifier on and apply a 2 cps one volt peak-to-peak square wave to the INPUT terminals. Set the INPUT SELECTOR switch to the DC X10 position and connect the 1000 ohm resistor from the DC OUTPUT terminal to chassis ground. Monitor the Amplifier output developed across the 500 ohm load resistor with the oscilloscope and adjust the potentiometer trimmer, R207, until the square wave has a flat top.

Set the INPUT SELECTOR switch to the 1 CPS X10 position and apply a 1 kc/s one volt peak-to-peak square wave to the INPUT terminals. Adjust the trimmer capacitor, C206, until the square wave has a flat top.

Set the INPUT SELECTOR switch to the 1 CPS X1 position and apply a 1 kc/s one volt peak-to-peak square wave to the INPUT terminals. Leave the 500 ohm load connected as previously. Adjust the trimmer capacitor C202 until the square wave output of the Amplifier has a flat top.

Occasionally these two trimmer capacitors may interact so that it is advisable to repeat these measurements and readjust the trimmer capacitors if necessary.

The trimmer capacitor C104 located on the large terminal board is used for stabilizing the amplifier. Under normal conditions this trimmer capacitor needs no adjustment even after tube changes. If for any reason the amplifier is unstable, or this trimmer capacitor has been defective, replaced, or adjusted in error, the following procedure will permit optimum adjustment of C104.

a. Set the INPUT SELECTOR switch to the 1 CPS X10 position and apply a 100 cps signal to the INPUT terminals.

b. Adjust the line voltage for 115 volts and switch the line switch in the rear of the chassis to the "114-125" position.

c. With no load across the OUTPUT terminals increase the input signal until the output as viewed on the oscilloscope is just below the clipping level.

d. If C104 is not adjusted to its optimum value, a burst of high frequency oscillation will be superimposed on the positive peak of the output signal. Adjust C104 until this burst of oscillation is removed.

If all electron tubes are changed when the Amplifier undergoes routine maintenance, the distortion, after the OUTPUT DC LEVEL and QUIESCENT CURRENT controls have been adjusted, will remain within specification. At 500 kc/s, however, the distortion may not be minimum. To obtain minimum distortion at 500 kc/s, it may be necessary to adjust the trimmer capacitor C156.

Commercial 500 kc/s distortion measuring equipment is not commonly available. Distortion measurements, however, can be easily made at this frequency by constructing a simple rejection filter, shown in Figure 7, which will attenuate 500 kc/s and pass higher harmonics to permit distortion measurements.

Since the typical Model DCA-50(R) Amplifier distortion at 500 kc/s is approximately 2-3%, a signal generator with less than 1% distortion is required for this measurement. If a generator with this distortion specification is not available, a band-pass (purifying) filter, shown in Figure 6, can be constructed to obtain a suitable distortion-free 500 kc/s source.

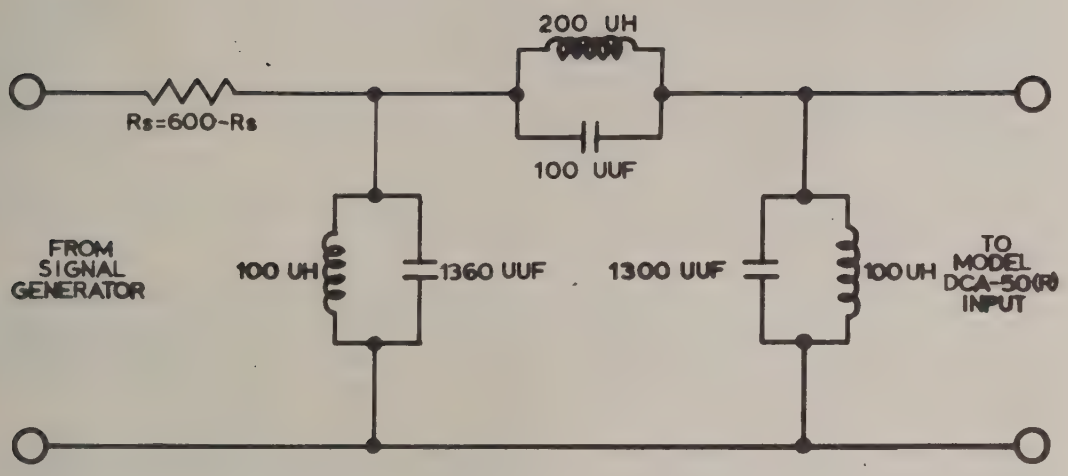

Figure 6 - Band-Pass (Purifying) Filter for Obtaining a Pure 500 kc Signal.

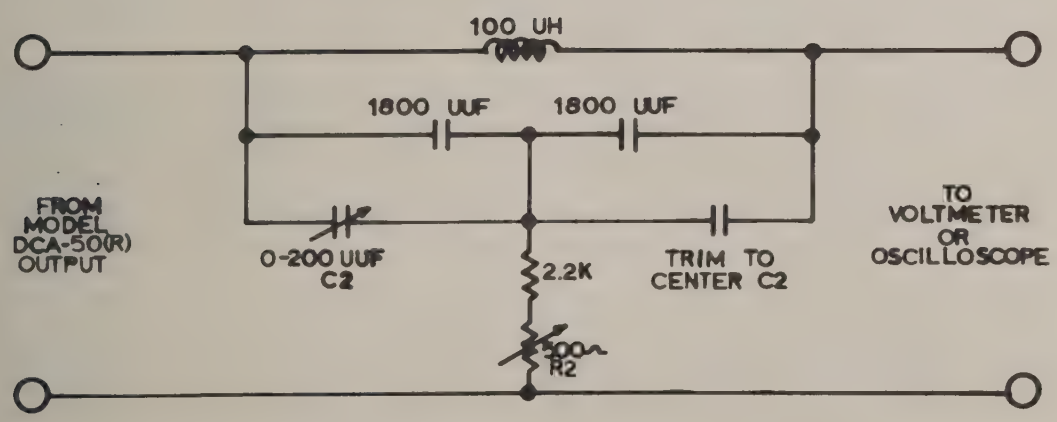

Figure 7 - Rejection Filter for 500 kc Distortion Measurements.

For convenience in use and to provide shielding, each of these filters may be constructed in a small metal chassis similar to the BUD "Minibox" #CU-3004. Two standard binding posts, similar to the type used on the front panel of the Model DCA-50(R), can be mounted on one end of the metal enclosure on 3/4 inch centers and two jacks (banana type), with one suitably insulated, can be mounted on the other end. The components in these filters require a tolerance of ±5%.

In addition to these filters the following test equipment is required for the 500 kc/s distortion-measuring procedure:

a. Sine-wave generator of approximately 10 volts rms maximum output at 500 kc/s with less than 1% distortion. If a generator with less than 1% distortion is not available, the purifying filter, shown in Figure 6, must be used. Since the filter has a gain of approximately five, a generator with approximately 2 volts rms output at 500 kc/s is sufficient.

b. Average-reading vacuum-tube voltmeter with low-capacity probe (10 uuf maximum) and frequency range up to 5 mc/s.

c. Oscilloscope with a bandwidth of 5 mc/s minimum and probe of 10 uuf maximum capacity.

d. Non-inductive 200 ohm ±5% resistor with a 100 watt minimum rating (a series and/or parallel combination of suitable 2 watt carbon resistors can fulfill this requirement).

Before using the rejection filter it is necessary to tune it for a null at 500 kc/s by adjusting the trimmers R2 and C2, shown in Figure 7. If this filter is constructed in a closed metal chassis, it is convenient to have access to these controls through a hole in the chassis.

Set the signal generator to a frequency of 500 kc/s and apply a signal of approximately 5 volts rms to the input of the band-pass (purifying) filter. Connect the output of the purifying filter to the input of the rejection filter and, using the probe, monitor the output of the rejection filter with the oscilloscope. With the oscilloscope set for maximum gain, adjust R2 and C2 until the 500 kc/s output of the rejection filter is nulled (minimum).

Turn the Amplifier on and set the INPUT SELECTOR switch to the 1 CPS X10 position. Connect the 200 ohm non-inductive load between the AC OUTPUT terminal and chassis ground. Apply a 10 volt rms 500 kc/s signal to the INPUT terminals of the Amplifier directly if the distortion of the sine-wave generator is less than 1%. If the distortion of the 500 kc/s source is greater than 1%, which is true for most commercial generators, insert the purifying filter, shown in Figure 6. This filter is designed to operate with a 600 ohm source. If the sine-wave generator has an internal impedance of 600 ohms, no additional series resistor, R_s, is required. If the generator source impedance is lower than 600 ohms, it is necessary to add a resistor so that the sum of R_s and the generator source impedance is equal to approximately 600 ohms.

When using the purifying filter, adjust the signal generator amplitude so that the 500 kc/s output voltage developed across the 200 ohm load of the Amplifier is approximately 100 volts rms. Connect the 100 volt rms output of the Amplifier to the input of the rejection filter and monitor the output of the rejection filter with the vacuum-tube voltmeter probe and oscilloscope probe. If necessary, adjust the sine-wave generator frequency so that the 500 kc/s component of the distorted signal is nulled (minimum). Adjust the trimmer capacitor C104 until the harmonic distortion, measured by the voltmeter or oscilloscope, is minimized.

The residual harmonic voltage at the output of the rejection filter can be measured by the average-reading vacuum-tube voltmeter of 5 mc/s bandwidth to obtain the rms average value of the distortion. Since the Amplifier output is 100 volts rms, the percent distortion is given directly by the reading of the vacuum-tube voltmeter.

After completion of this periodic calibration and adjustment, which is recommended also after replacement of the electron tubes, the Amplifier should perform in accordance with its rated specifications. If it is necessary to check other specifications, refer to ACCEPTANCE AND PERFORMANCE TESTS, SECTION VI.

SECTION VI - ACCEPTANCE AND PERFORMANCE TESTS

This Test Procedure is included in the Model DCA-50(R) Operating and Maintenance Manual to assist Instrument Maintenance Personnel in making routine performance checks and to assist Incoming Inspection Personnel in making initial acceptance tests.

The Procedure outlined is based on the use of standard laboratory test equipment which should be available to all personnel who may perform these tests. It should be understood that the procedure outlined here does not necessarily represent the Factory Test Procedure in method, scope or detail.

The majority of this Amplifier's specifications require care in checking, but the method of measurement is neither unusual nor extremely difficult. These specifications will be mentioned briefly and any applicable precautions will be noted.

The specifications given under Technical Summary apply to the direct-coupled (DC) positions of the INPUT SELECTOR switch and the direct-coupled (DC) OUTPUT terminals unless otherwise specified.

Primary consideration is given to measurement of harmonic distortion, which may be difficult at the low levels of distortion and wide frequency range encountered in this Amplifier.

The Procedure is prefaced by a series of precautions which should be studied carefully before any checking is attempted.

EQUIPMENT REQUIRED to perform the checks outlined in this Procedure:

1. Audio Oscillator (Krohn-Hite Model 440-A or equivalent) with sine-wave and square-wave output (square-wave rise time 0.5 microsecond or better) covering the frequency range from 0.1 cps to 100 kc/s. In the frequency range from 5 cps to 10 kc/s the harmonic distortion should be less than 0.1 percent.

2. Signal Generator with 10 volt rms output from 100 kc/s to 500 kc/s with less than 1 percent harmonic distortion.

3. AC Voltmeter capable of indicating 1 millivolt to 200 volts with a bandwidth of 2 mc/s.

4. Passive non-inductive loads (100 watt resistors having values of 200 and 330 ohms ±5%). These can be series and/or parallel combination of 2 watt composition resistors.

5. Wide Band Oscilloscope with direct-coupled vertical amplifier having response to 5 mc/s. Some oscilloscopes may be used for measuring phase shift*.

---

*See "A New Angle on Phase Measurements" by G. E. Bauder - a Tektronic, Inc. publication.

6. Frequency Counter or Phase-Angle-Meter may be needed for phase measurements if suitable oscilloscope is not available.

7. Wave Analyzer or Distortion Meter.

8. DC Voltmeter or other suitable indicator in the 10 millivolt to 10 volt range.

9. AC Voltmeter for checking line voltage.

10. Variable Autotransformer to set line voltage.

PRECAUTIONS to be observed when making measurements on this Amplifier:

1. Use shielded cables for all test signal connections.

2. Use short low-capacity cable on the Amplifier OUTPUT to avoid excessive capacitive loading at frequencies above 100 kc/s. See OPERATION, SECTION II-4.

3. Check that the Amplifier is functioning and is being operated within its ratings as outlined in OPERATION, SECTION II.

4. Make certain that all auxiliary test equipment is calibrated and working properly in accordance with the manufacturers' specifications.

1. POWER OUTPUT

The power output of the Amplifier can be measured by an output-power meter or by a standard wattmeter with a separate load, provided that the wattmeter is calibrated for the measuring frequency. The simplest method consists of measuring the voltage developed across a load resistor of known value. In most cases the value of this resistor will be 200 or 330 ohms with a 100 watt minimum rating. It should be non-inductive for high-frequency measurements and can be a series and/or parallel combination of 2 watt composition resistors.

Power in watts is determined from the relation $E(rms)^2/R$ for sinusoidal voltages and $E(peak\text{-}to\text{-}peak)^2/4R$ for square wave voltages. Other waveforms require very careful handling if a power computation is to be made.

For reactive-load tests based on a reactive load impedance of 200 ohms, a different load is needed at each different frequency (80 uf or 3.2 henries at 10 cps; 0.08 uf or 0.32 millihenries at 100 kc/s, etc.).

Rated output cannot be obtained if the line voltage is below 105 volts.

If the direct-coupled (DC) positions of the INPUT SELECTOR switch are used with uni-directional square wave input signals, without an external coupling capacitor to remove the dc component, the maximum output power will be limited by clipping at the peak of the uni-directional swing.

Above 500 kc/s, the available output power drops as shown in Figure 11.

The Amplifier is not restricted to the matched load impedances. With other load impedance values the maximum power output will be reduced as shown in Figure 8. Characteristics of the Amplifier, other than maximum power output, will not be affected by the use of moderately mismatched loads. Maximum power output from this Amplifier is obtained just below the signal level at which clipping (squaring) of a sinusoidal output signal occurs. The maximum signal level for square-wave operation is more difficult to detect and is usually indicated by the onset of "ringing" and spurious high-frequency transient signals which modify the output square wave. If the Amplifier is left in an overloaded condition for any appreciable time, the fuse may blow.

2. OUTPUT REGULATION

Output regulation is determined by measuring the change ("e") in output voltage from no load to full load when a 200 to 330 ohm (100 watt rating) load resistor is applied to the OUTPUT terminals. The Amplifier input voltage must be held constant during these measurements because the output voltage change ("e") usually will be less than 2%. The output voltage will normally decrease when the load is applied. A decrease indicates positive regulation while negative regulation corresponds to an increase in the output voltage with load.

The output regulation in percent is defined as $-100e/E_o$, where E_o is the open-circuit output voltage. As an example, at 200 kc/s, assume that E_o decreases by 1 volt when a 200 ohm resistive load is applied to the OUTPUT terminals. If 100 volts rms is the open circuit voltage, the percent output regulation is -100 x -1/100 or +1%.

3. INTERNAL IMPEDANCE

In an amplifier that incorporates only degenerative output feedback, the internal impedance will always be positive and consist of series resistance and reactance. If the resistive component of the internal impedance is positive, the amplifier output regulation will always be positive.

The Amplifier internal impedance can be calculated from the Output Regulation and the no-load to full-load change ("θ") in the output voltage phase angle. See SECTION VI-6. It is desirable to measure the phase angles with an accuracy of one (1) degree or better. By applying the cosine theorem to the vector triangle made up of the loaded and the unloaded output voltages with phase different "θ" and the voltage drop across the internal impedance, the following formula is obtained.

$$Z_I = Z_L \sqrt{A^2 + 4\,(1 + A)\,(\sin \theta/2)^2}$$

where Z_I is the magnitude of the internal impedance to be determined, Z_L is the magnitude of the impedance of the load and

$$A = \frac{\% \text{ Output Regulation}}{100 - \% \text{ Output Regulation}}$$

For small values of Output Regulation (in the order of 2%), "A" is approximately equal to the % Output Regulation/100 with negligible error.

At frequencies below 50 kc/s, θ is normally negligible and $Z_I = AZ_L$.

4. OUTPUT DC LEVEL STABILITY

For these tests, make certain that the measuring equipment does not drift more than 1 millivolt per hour. The specifications are expressed in percent of the maximum obtainable peak output voltage. For 150 volts, the ±0.02% limit corresponds to 0.02/100 x 150, which is 0.03 volts or 30 millivolts.

5. FREQUENCY RESPONSE

Frequency response is defined as the frequency range over which the voltage gain of the Amplifier remains within the specified limits. In order to obtain the maximum frequency response, the INPUT SELECTOR switch must be in one of the direct-coupled (DC) positions.

This specification can be checked with or without a load on the Amplifier. The performance with various loads is shown in Figure 10. If the measurement is made with a load connected, the maximum power limitation versus frequency shown in Figure 11 must be carefully observed. At frequencies above 500 kc/s, the input voltage must be reduced to stay within the power limitation. Even if the measurement is made under no-load conditions, the input voltage must be reduced above 500 kc/s because the output voltage swing is restricted by limitations in the driver stage.

6. PHASE SHIFT

This instrument will faithfully amplify complex waveforms because it has an approximately linear phase shift versus frequency characteristic. The deviation from linear phase shift, or phase distortion, can be readily determined by plotting the phase shift characteristic from measurements made using a phase angle meter, frequency counter, oscilloscope or other suitable phase measuring device. A straight line should be carefully drawn through an average of the plotted points with a slope such that an extension of the line would pass through the origin.

7. HARMONIC DISTORTION

It is essential that certain precautions be observed when a wave analyzer or distortion meter is used to measure low values of distortion.

Experience at Krohn-Hite does not cover all makes of distortion measuring equipment, but the same general considerations should apply to all wave analyzers and distortion meters.

When using a distortion meter to measure low values of distortion, the following information and precautions apply:

A. Great care should be taken to ensure that the instrument is properly calibrated in accordance with the manufacturer's instructions. In particular, since the panel meter indicates internally generated power supply ripple voltage, it is important that any hum-balance adjustments be made with great care. Before making a measurement, check that no meter indication is observed on any range when the INPUT terminals are shorted.

B. This type of instrument usually has an internal amplifier which has some inherent distortion. Consequently there will be an indication of distortion, even when a pure sine-wave voltage is applied. The amount of internal distortion is usually small, and only becomes important when the low end of the most sensitive scale is being read. A typical residual distortion specification is 0.1%, and it is assumed that an actual value of 0.05% might reasonably be expected in a reputable manufacturer's instrument. This amount of residual distortion leads to a reading error of only 1% when the total reading is 5%, but when a total distortion value of 0.1% is being measured, the reading error can be as high as 50%.

C. At very low distortion levels the phase relationship between input harmonic voltages and those generated within the distortion meter becomes important because the panel meter indicates the magnitude of the vector sum of these voltages. Depending on relative phase and amplitude, an input harmonic voltage could produce a distortion reading anywhere from zero to many times its actual value.

When using a wave analyzer to measure very low values of distortion, the following information and precautions apply:

A. Great care should be taken to ensure that the instrument is properly calibrated in accordance with the manufacturer's instructions. This is most important.

B. When this instrument is used as a distortion meter, the sensitivity controls are adjusted to give a full scale (100%) meter reading when the tuning control is carefully set to the fundamental frequency of the input signal. Once the analyzer sensitivity and input signal amplitude adjustments have been made, they <u>must not</u> be disturbed while the harmonics are being measured.

C. When this instrument is used as a frequency selective voltmeter to measure relative fundamental and harmonic voltage amplitudes, an input sensitivity setting must be selected which gives an "on scale" meter reading when the tuning control is carefully set to the fundamental frequency of the input signal. If the analyzer does not have a variable sensitivity control, the input signal amplitude can be adjusted to give a full scale meter reading, if desired, to facilitate the measurement. Once the analyzer sensitivity and input signal amplitude adjustments have been made, they must not be disturbed while the harmonics are being measured.

D. When using the analyzer to measure low levels of distortion by either of the above methods, do not increase the analyzer sensitivity or increase the input signal amplitude independently in an attempt to obtain a better harmonic voltage amplitude or percentage reading. The input circuits of the analyzer will be overloaded by the fundamental frequency voltage and the resulting distortion will lead to erroneous readings, even though the meter appears to be functioning properly.

E. With regard to residual instrument distortion and the phase relationship between these harmonics and input signal distortion harmonics, the same considerations apply as in the distortion meter.

Another difficulty in checking the distortion of the Model DCA-50(R) Amplifier is lack of equipment for use at the high frequency end of its range. In this case it is possible to obtain satisfactory results with LC circuits of the type described in PERIODIC CALIBRATION AND ADJUSTMENT. SECTION V.

The DC linearity of the Amplifier can be checked by plotting output vs. input voltage and measuring the deviation from a straight line drawn through the origin (make certain that the Amplifier output dc level is set to zero before the data is taken).

8. HUM AND NOISE

When checking this specification make certain that the INPUT terminals are very carefully shielded against electrostatic pick-up. It is suggested that for the open circuit cases, a shielded plug such as the GR type 274-ND or 274-NK Shielded Double Plug, with no leads connected, be used for this purpose.

Measurement of the noise should be made with an ac average-reading vacuum-tube voltmeter having a bandwidth of not more than 2 mc to avoid the possibility of including unwanted radio-frequency voltages picked up from the power line or by incomplete shielding of the meter leads.

9. DYNAMIC RANGE

This is a measure of signal to noise ratio. With a maximum rms output of 130 volts and noise of 5 millivolts the dynamic range is approximately 130/0.005 or 88 db.

10. SQUARE-WAVE RESPONSE

The typical square wave response is shown in Figure 9.

SECTION VII - SERVICE AND WARRANTY

KROHN-HITE Instruments are designed and manufactured in accordance with sound engineering practices and should give long trouble-free service under normal operating conditions. If this Amplifier fails to provide satisfactory service and the source of trouble cannot be located, write to the Factory Service Department giving all the information available concerning the failure.

Do not return the Instrument without written authorization for, in most cases, the information necessary to repair the Instrument can be provided, thus avoiding the transportation problems and cost. When it becomes necessary to return the Instrument to the Factory, kindly pack it carefully and ship via Express, prepaid.

KROHN-HITE Instruments are conservatively designed to provide continuously reliable service under normal laboratory conditions. The material and workmanship in every new instrument manufactured by KROHN-HITE is guaranteed for one year from the date of shipment to the original purchaser. Any instrument developing defects during this period will be repaired or replaced without charge when the failure is the result of defective material or workmanship. This warranty does not apply to electron tubes, fuses, batteries, transistors and other seimconductor devices.

KROHN-HITE reserves the right to make design changes at any time without incurring any obligation to incorporate these changes in instruments previously purchased.

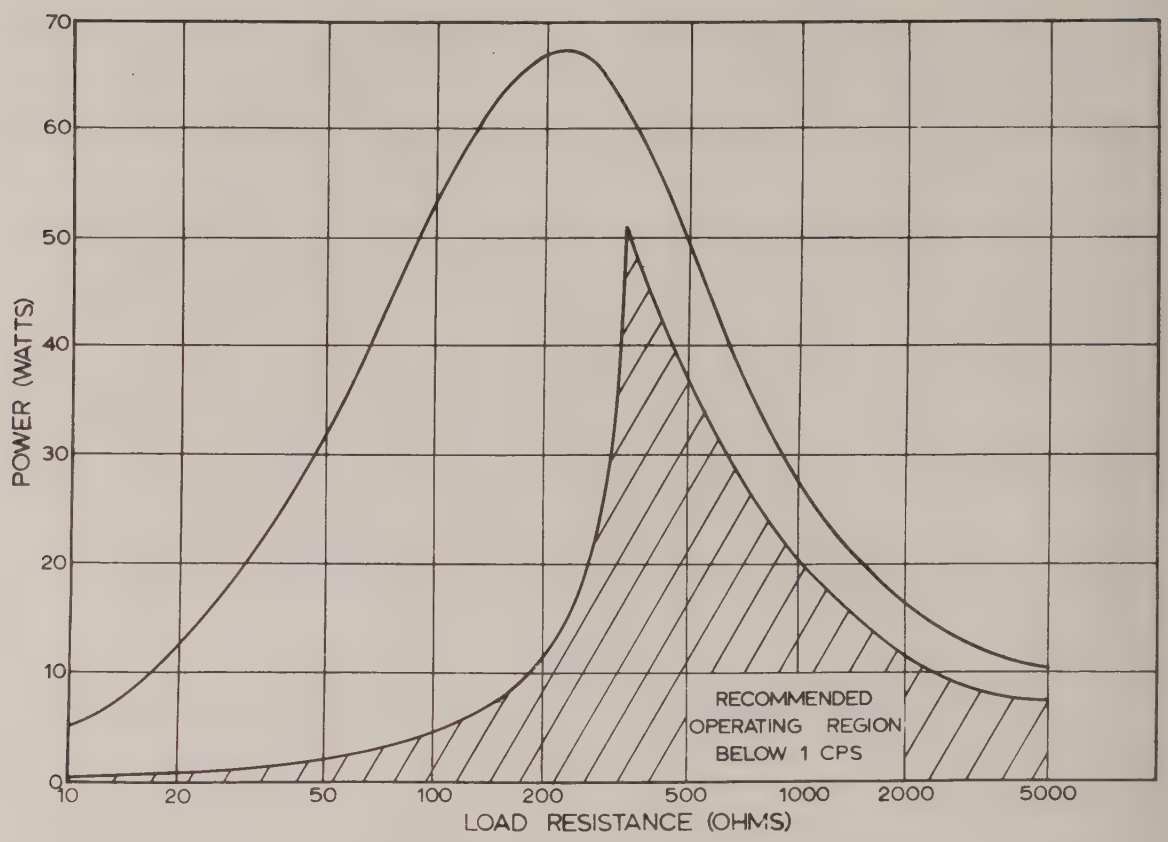

Figure 8 - MAXIMUM POWER OUTPUT vs. LOAD RESISTANCE

For values above 2,500 ohms, power at 1 kc is approximately 25,000 divided by load ohms. Under 1,000 ohms, permissible power output below 1 cps is reduced because of tube dissipation ratings.

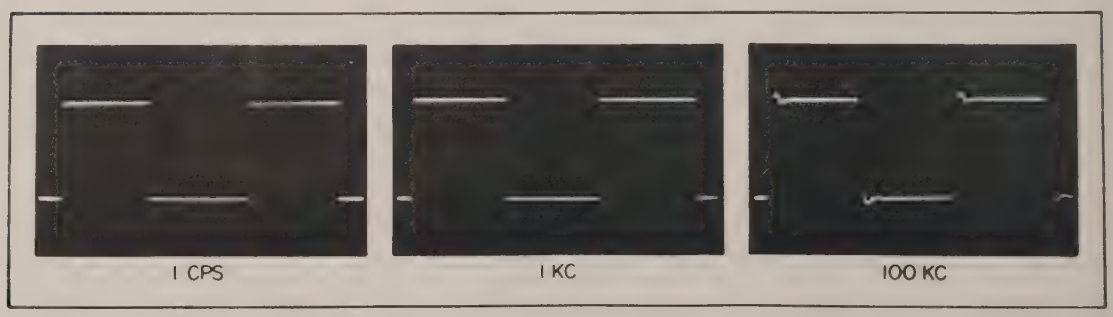

Figure 9 - SQUARE WAVE RESPONSE

These waveforms show a 200 volt peak-to-peak signal across a 200 ohm, 50-watt resistive load.

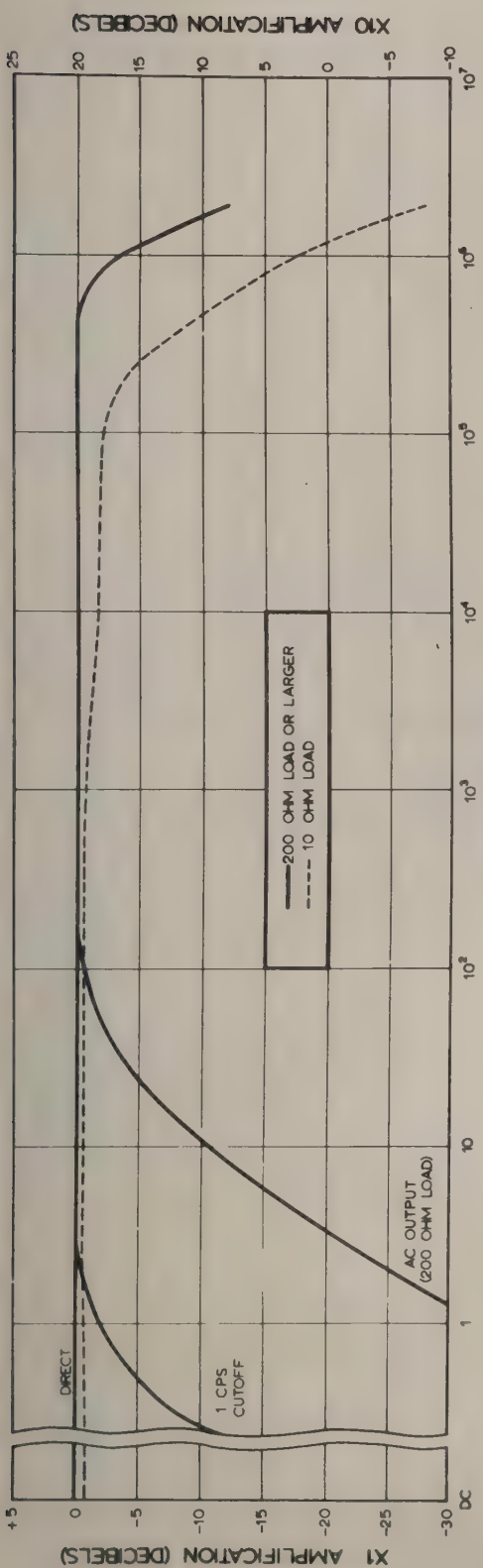

Figure 10 - VOLTAGE AMPLIFICATION vs. FREQUENCY

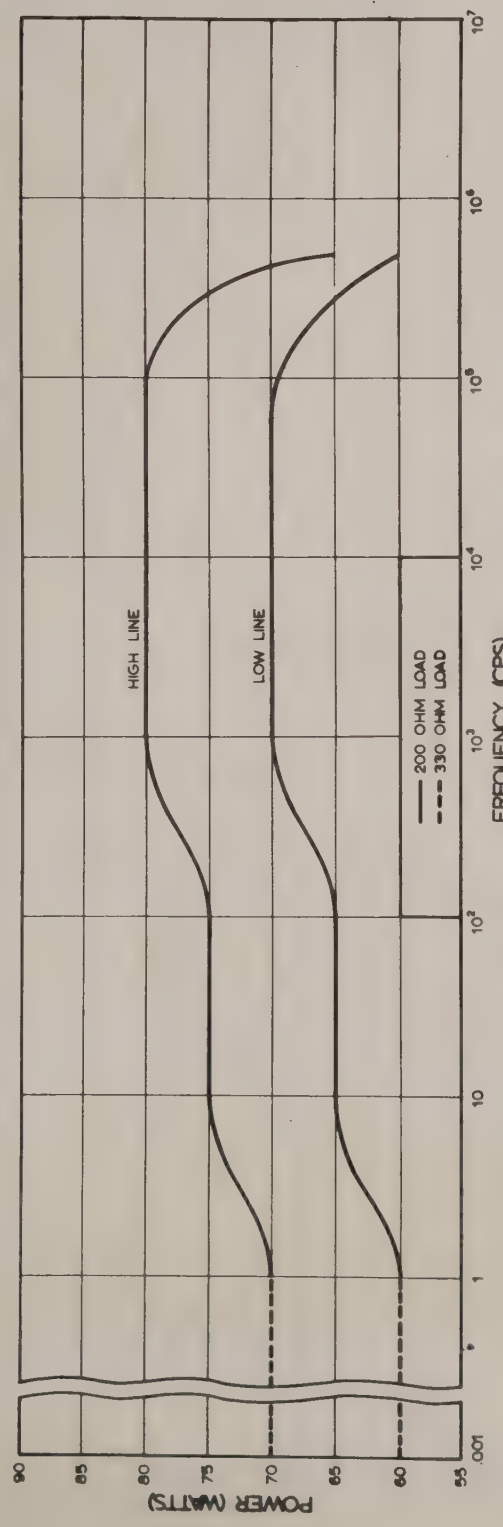

Figure 11 - MAXIMUM POWER OUTPUT vs. FREQUENCY

Curves are for designated line voltages and resistive loads. Below 1 cps, the maximum power output into 200 ohms is reduced because of tube dissipation ratings.

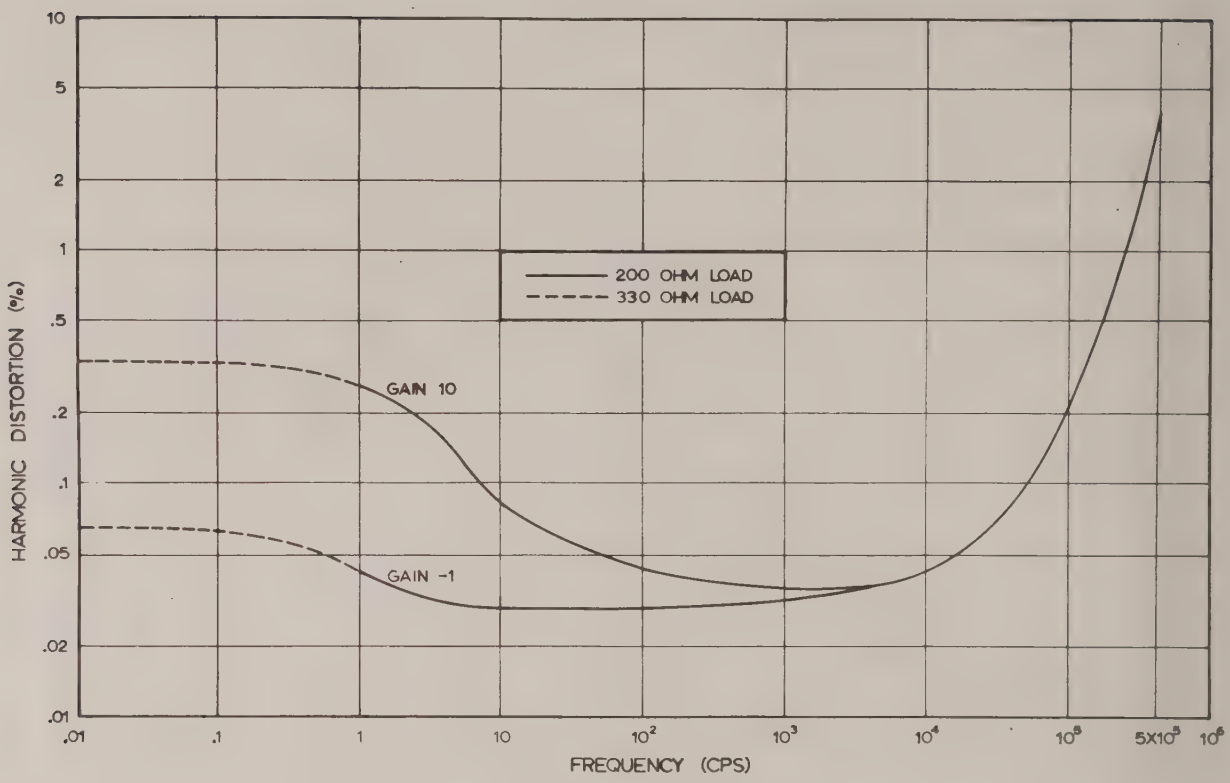

Figure 12 - DISTORTION vs. FREQUENCY

Curves are for 50 watt output power level

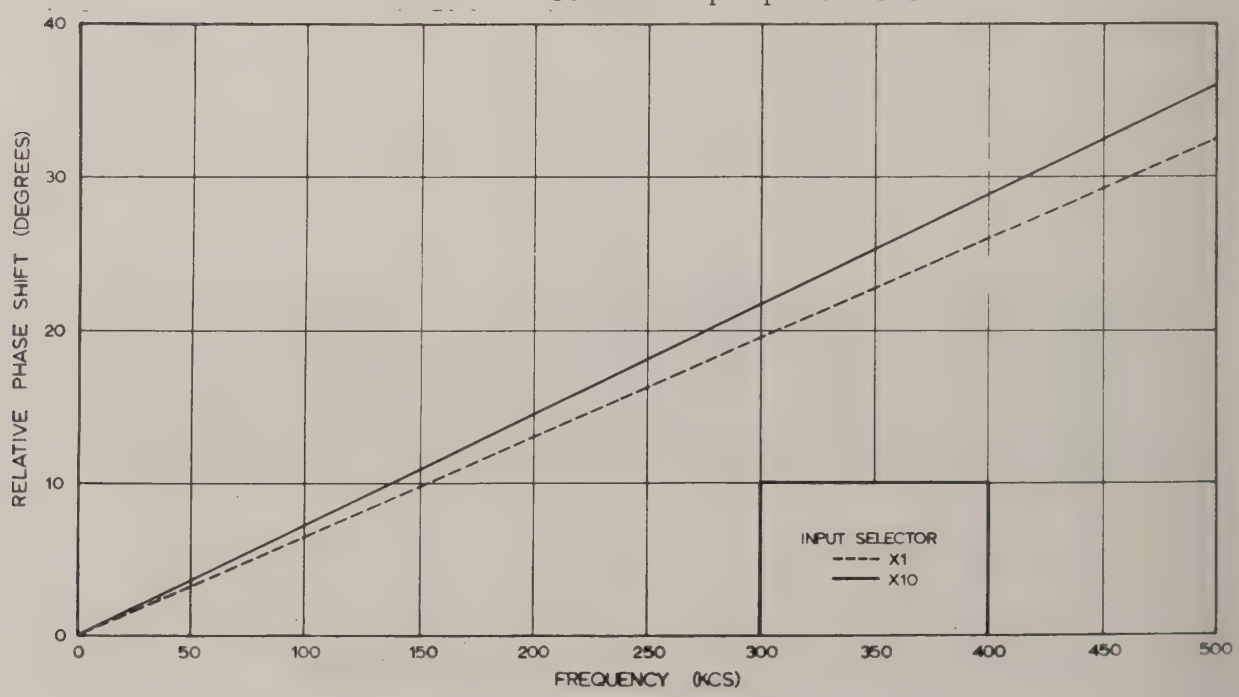

Figure 13 - PHASE SHIFT vs. FREQUENCY

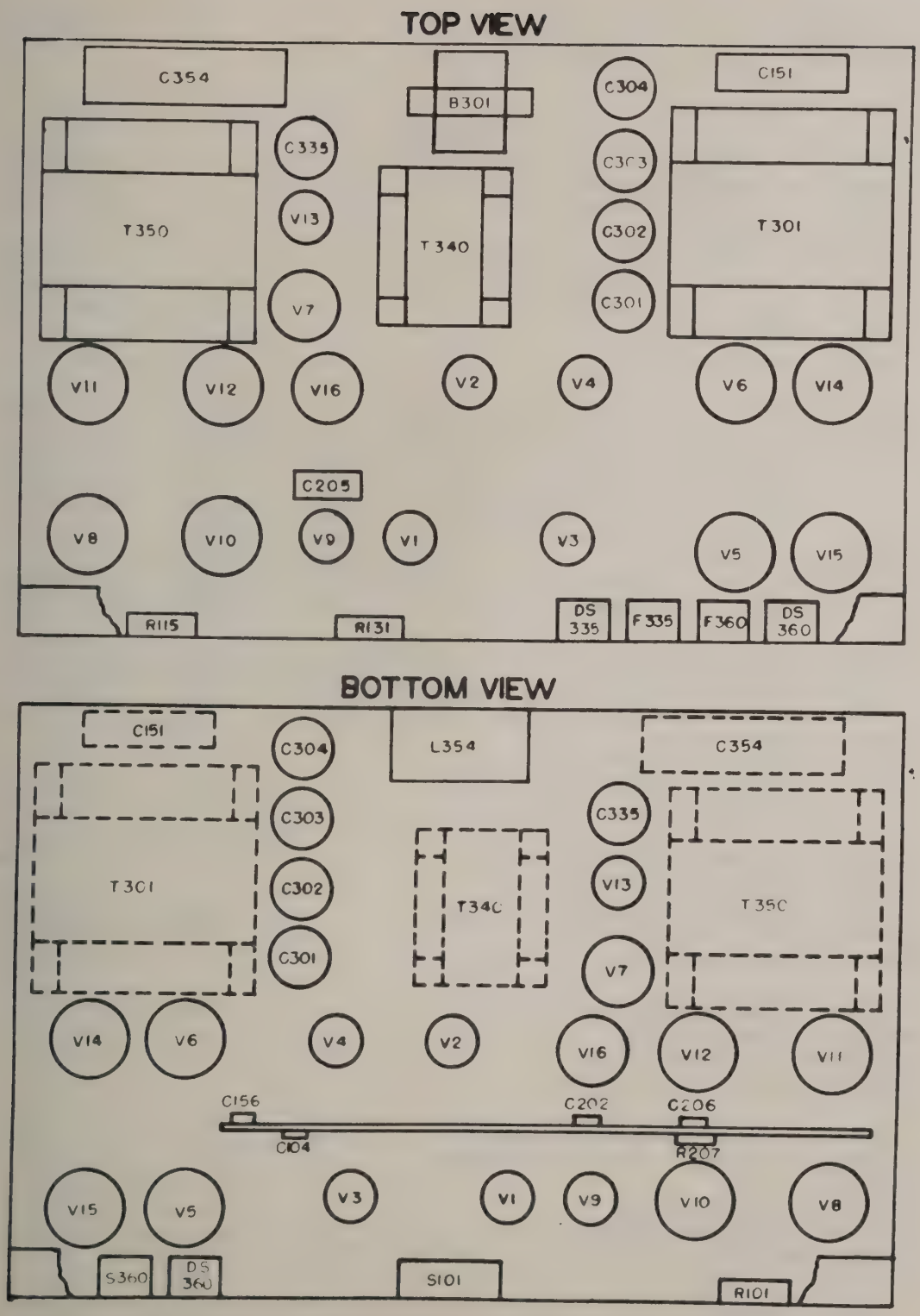

Figure 14 - COMPONENT LOCATION DIAGRAM

Schematic Symbol	Description	Qty.	Mfg.	Mfg. Part No.
B-301	Fan Motor	1	ALL	JS0690
C-101	0.22MF ± 10% 400V Tubular	1	SP	160P22494
C-102	330MMF ± 20% 500V Mica	2	EL	CM19C331
C-103	6.8MMF ± 20% 500V Mica	1	K-H	50-68-C103
C-104	1-12MMF Trimmer	1	ARCO	420
C-105	100MMF ± 20% 500V Mica	2	EL	CM19C101M
C-106	0.1MF ± 10% 1000V Tubular	2	SP	160P104910
C-107	10MMF ± 5% 500V Mica	1	EL	CM19C100J
C-108	Same as C-106			
C-109	Same as C-102			
C-120	470MMF ± 10% 500V Mica	1	EL	CM19C471K
C-121	0.0047MF ± 10% 400V Tubular	1	SP	160P47294
C-122	0.01MF ± 20% 400V Tubular	2	SP	160P10304
C-123	0.001MF ± 20% 400V Tubular	2	SP	160P10204
C-124	470MMF ± 20% 500V Ceramic	1	SP	19C160
C-125	0.001MF ± 5% 400V Tubular	1	SP	160P10254
C-126	Same as C-105			
C-127	0.02MF ± 5% 400V Tubular	1	SP	160P20354
C-128	1MMF ± 0.25MMF 500V	1	K-H	50-1-C128
C-150	0.0022MF ± 10% 400V Tubular	1	SP	160P22204
C-151	20MF ± 20% 300V M.P.	1	C-D	TMORH-102
C-152	0.01MF ± 20% 500V Ceramic	1	SP	29C9B6
C-153	Same as C-123			
C-154	Same as C-122			
C-155	24MMF ± 20% 500V Mica	1	EL	CM19C24M
C-156	8-60MMF Trimmer	3	EL	T50410
C-201	0.15MF ± 20% 400V Tubular	1	SP	160P15404
C-202	Same as C-156			
C-204	0.068MF ± 10% 200V Tubular	1	SP	160P68392
C-205	2MF ± 20% 100V Can	1	C-D	WC-1200-1
C-206	Same as C-156			
C-301	120MF 450V Electrolytic	4	SP	D32882
C-302	Same as C-301			
C-303	Same as C-301			
C-304	Same as C-301			
C-317	0.1MF ± 20% 400V Tubular	4	SP	160P10404
C-319	0.001MF ± 20% 600V Tubular	1	SP	160P10206
C-332	Same as C-317			
C-334	4MF 450V Electrolytic	2	SP	TVA-1702
C-335	Same as C-334			
C-340	Same as C-317			
C-341	60MF 250V Electrolytic	1	SP	P33894

Schematic Symbol	Description	Qty.	Mfg.	Mfg. Part No.
C-350	Same as C-317	1		
C-351	0.1MF ± 20% 200V Tubular	1	SP	160P10402
C-352	0.1MF ± 20% 600V Tubular	1	SP	160P10406
C-354	7 x 7MF ± 10% 1000V Can	1	C-D	TRH102
C-355	20MF 450V Electrolytic	1	SP	D17064
CR-120	PIV > 200V, RB > 2 Meg RF < 200 ohm	2	RCA	1N3254
CR-150	Same as CR-120			
CR-301	PIV 600V, IF 500MA IS 35A	8	RCA	1N3255
CR-302	Same as CR-301			
CR-303	Same as CR-301			
CR-304	Same as CR-301			
CR-305	Same as CR-301			
CR-306	Same as CR-301			
CR-307	Same as CR-301			
CR-308	Same as CR-301			
DS-335	Blown Fuse Indicator	2	I-D	1040H5
DS-351	Pilot Lite	1	GE	47
DS-360	Same as DS-335			
F-335	3/4 Amp. SLO-BLO Fuse	1	BU	MDL 3/4
F-360	6 1/4 Amp. SLO-BLO Fuse	1	BU	MDX 6 1/4
L-101	220 μh	2	DEL	3500-16
L-121	1.5 MH	1	DEL	3500-34
L-122	1.0 MH	1	DEL	BS-805
L-123	Same as L-101			
L-150	5.6 μh	1	DEL	2150-18
L-340	22 MH	2	DEL	2281-12
L-341	Same as L-340			
L-354	11 HY 500 ohm	1	K-H	C-100-21A
R-101	5K 2W Variable Resistor	1	A-B	JAIN060P5020A
R-102	1.2M, ± 10% 1/2W	1	A-B	EB-1251
R-103	180K ± 10% 1/2W	3	A-B	EB-1841
R-104	100 ohm ± 20% 1/2W	17	A-B	EB-1012
R-105	13K ± 5% 2W	2	A-B	HB-1335
R-106	500K ±1% 1 1/2W	2	Tel Labs	SA-6
R-107	3.3K ± 5% 1/2W	1	A-B	EB-3325
R-108	18K ± 10% 2W	1	A-B	HB-1831
R-109	50K ± 5% 20W	1	W-L	20S50000
R-110	Same as R-104			
R-111	Fact. Adj. Approx. 560 ohm	1	A-B	EB-5611
R-112	Same as R-105			
R-113	Same as R-106			
R-114	200K ± 1% 1/2W	2	IRC	Type MEC

Schematic Symbol	Description	Qty.	Mfg.	Mfg. Part No.
R-115	10K 2W Variable Resistor	1	A-B	JAIH040S1030A
R-116	Same as R-114			
R-117	500K ±1% 1/2W	10	IRC	Type CEC-TO
R-118	Same as R-117			
R-119	Same as R-117			
R-120	4K ± 5% 20W	1	W-L	20S4000
R-121	68K ± 1% 1W	1	A-B	GB-6831
R-122	Same as R-104			
R-123	33K ± 10% 1/2W	1	A-B	EB-3331
R-124	2.5K ± 5% 10W	1	K-H	50-250-R124
R-125	47K ± 10% 1/2W	1	A-B	EB-4731
R-126	330K ± 10% 1W	1	A-B	GB-3341
R-127	Same as R-104			
R-128	Same as R-104			
R-129	35K ± 5% 10W	1	K-H	50-350-R129
R-130	3.4K ± 5% 30W	1	K-H	50-340-R130
R-131	1K 5W Variable Resistor	1	CRL	BA-401-226
R-132	Same as R-104			
R-133	130K ± 5% 2W	1	A-B	HB-1345
R-134	Same as R-104			
R-135	470K ± 10% 2W	1	A-B	HB-4741
R-136	220K ± 5% 2W	1	A-B	HB-2245
R-137	82K ± 1% 1/2W	1	A-B	EB-8231
R-138	4K ± 5% 10W	1	K-H	50-400-R138
R-139	8.5K ± 5% 30W	1	K-H	50-850-R139
R-140	1K ± 10% 1/2W	1	A-B	EB-1021
R-141	1M ± 10% 1W	2	A-B	GB-1051
R-142	Same as R-141			
R-143	330K ± 10% 2W	1	A-B	HB-3341
R-144	47K ± 10% 2W	1	A-B	HB-4731
R-150	Part of Plate Cap Assembly			
R-151	Same as R-150			
R-152	470 ohm ± 10% 1/2W	4	A-B	EB-4711
R-153	100 ohm ± 10% 1W	4	A-B	GB-1011
R-154	Same as R-152			
R-155	Same as R-153			
R-156	22 ohm ± 10% 4W	4	A-B	HM-2201
R-157	Same as R-156			
R-158	35 ohm 25W	1	K-H	50-35-R158
R-159	47K ± 10% 1W	1	A-B	GB-4731
R-160	Same as R-150			
R-161	Same as R-150			
R-162	Same as R-153			
R-163	Same as R-153			
R-164	Same as R-152			
R-165	Same as R-152			
R-166	Same as R-156			
R-167	Same as R-156			
R-168	390K ± 5% 1/2W	1	A-B	EB-3945

Schematic Symbol	Description	Qty.	Mfg.	Mfg. Part No.
R-169	3.9K ± 5% 1/2W	1	A-B	EB-3925
R-170	Same as R-104			
R-171	2.7M ± 10% 2W	1	A-B	HB-2751
R-172	Same as R-104			
R-173	Same as R-103			
R-174	Same as R-117			
R-175	Same as R-117			
R-176	Same as R-117			
R-201	Fact. Adj. Approx. 3.9K ± 10% 1/2W	1	A-B	EB-3921
R-202	6M 1% Deposited Carbon	1	IRC	Type DCC
R-203	1.8M 1% Deposited Carbon	1	IRC	Type DCC
R-204	725K 1% Deposited Carbon	1	IRC	Type DCC
R-205	220K 1% Deposited Carbon	1	IRC	Type DCC
R-206	5.7M 1% Deposited Carbon	1	IRC	Type DCC
R-207	1M Potentiometer	1	CTS	FM5878
R-208	1.72M 1% Deposited Carbon	1	IRC	Type DCC
R-301	220K ± 10% 2W	2	A-B	HB-2241
R-302	6 ohm ± 5% 10W	1	K-H	50-6-R302
R-303	20 ohm ± 5% 20W	1	K-H	50-20-R303
R-304	Same as R-301			
R-310	Same as R-104			
R-311	Same as R-104			
R-312	200 ohm tapped at 100 ohm 20W	4	K-H	50-200-R312
R-313	Same as R-104			
R-314	470K ± 5% 1/2W	2	A-B	EB-4745
R-315	Same as R-104			
R-316	Same as R-312			
R-317	216K ± 1% 1/2W	2	IRC	Type MEC
R-318	150K ± 1% 1/2W	2	IRC	Type MEC
R-319	5.87K tapped at 2.7K 40W	1	K-H	50-587-R319
R-320	Same as R-318			
R-325	Same as R-104			
R-326	Same as R-104			
R-327	Same as R-312			
R-328	Same as R-104			
R-329	Same as R-314			
R-330	Same as R-104			
R-331	Same as R-312			
R-332	Same as R-317			
R-333	Same as R-117			
R-334	6.3K ± 5% 25W	1	K-H	50-630-R334
R-335	390K ± 10% 1/2W	1	A-B	EB-3941
R-336	Same as R-117			
R-337	Same as R-117			
R-338	Same as R-117			

Schematic Symbol	Description	Qty.	Mfg.	Mfg. Part No.
R-340	16.3K tapped at 5K and 11.3K 55W	1	K-H	50-163-R340
R-350	150K ± 10% 1/2W	1	A-B	EB-1541
R-351	Same as R-103			
R-352	470K ± 10% 1/2W	1	A-B	EB-4741
R-353	430K ± 5% 1/2W	1	A-B	EB-4345
R-355	13.5K ± 5% 20W	1	K-H	50-135-R355
R-356	40K ± 5% 20W	1	W-L	20S40000
R-360	100K ± 10% 1/2W	1	A-B	EB-1041
S-101	Input Selector Switch	1	K-H	DCA10-15
S-301	Fan Interlock Switch	1	C-H	8411K4
S-340	DPDT Slide Switch	1	AH&H	81147-C
S-360	DPDT Power Switch	1	C-H	CH-8373-K7
S-361	170 Deg. F Thermostat	1	ST	Type A503
T-301	Power Transformer	1	K-H	P-100-34A
T-340	Screen Transformer	1	K-H	P-100-33A
T-350	High Voltage Transformer	1	K-H	P-100-35A
V-1	6BK7B Tube	1		6BK7B
V-2	6AQ5A Tube	1		6AQ5A
V-3	6CL6 Tube	2		6CL6
V-4	Same as V-3			
V-5	6DQ5 Tube	4		6DQ5
V-6	Same as V-5			
V-7	5R4GYB Tube	1		5R4GYB
V-8	6AS7A Tube	4		6AS7A
V-9	12AX7A Tube	1		12AX7A
V-10	Same as V-8			
V-11	Same as V-8			
V-12	Same as V-8			
V-13	6X4 Tube	1		6X4
V-14	Same as V-5			
V-15	Same as V-5			
V-16	6AU5GT Tube	1		6AU5GT
	Plate Cap Assembly	4	AL	911SRL-1BC

MANUFACTURER LISTING

Abbreviation		
A-B	Allen Bradley Company	Milwaukee 4, Wisc.
AH&H	Arrow-Hart & Hegeman Electric Co.	Hartford 6, Conn.
AL	Alden Products Company	Brockton 64, Mass.
ALL	Alliance Manufacturing Co.	Alliance, Ohio
ARCO	ARCO Electronics Inc.	Great Neck, N. Y.
BU	Bussman Manufacturing Co.	St. Louis, Mo.
C-D	Cornell-Dubilier Electric Co.	South Plainfield, N. J.
C-H	Cutler-Hammer Inc.	Milwaukee, Wisc.
CRL	Centralab	Milwaukee 1, Wisc.
CTS	Chicago Telephone Supply Corp.	Elkhart, Ind.
DEL	Delevan Electronics Corp.	East Aurora, N. Y.
EL	Elmenco	Willimantic, Conn.
GE	General Electric Co.	Schenectady, N. Y.
HOFF	Hoffman Electronics Corp.	Evanston, Ill.
I-D	Industrial Devices, Inc.	Edgewater, N. J.
IRC	International Resistance Co.	Philadelphia, Pa.
K-H	Krohn-Hite Corp.	Cambridge, Mass.
RCA	Radio Corporation of America	Harrison, N. J.
ST	Stevans Manufacturing Co., Inc.	Mansfield, Ohio
SP	Sprague Electric Company	North Adams, Mass.
W-L	Ward Leonard Electric Co.	Chicago, Ill.

Manufacturer's Part No. listed may not agree with Part No. found in instrument, but are direct replacements.

When ordering parts from Factory, the following information should be supplied:

Instrument Model Number
Serial Number
Description
Manufacturer
Part No.

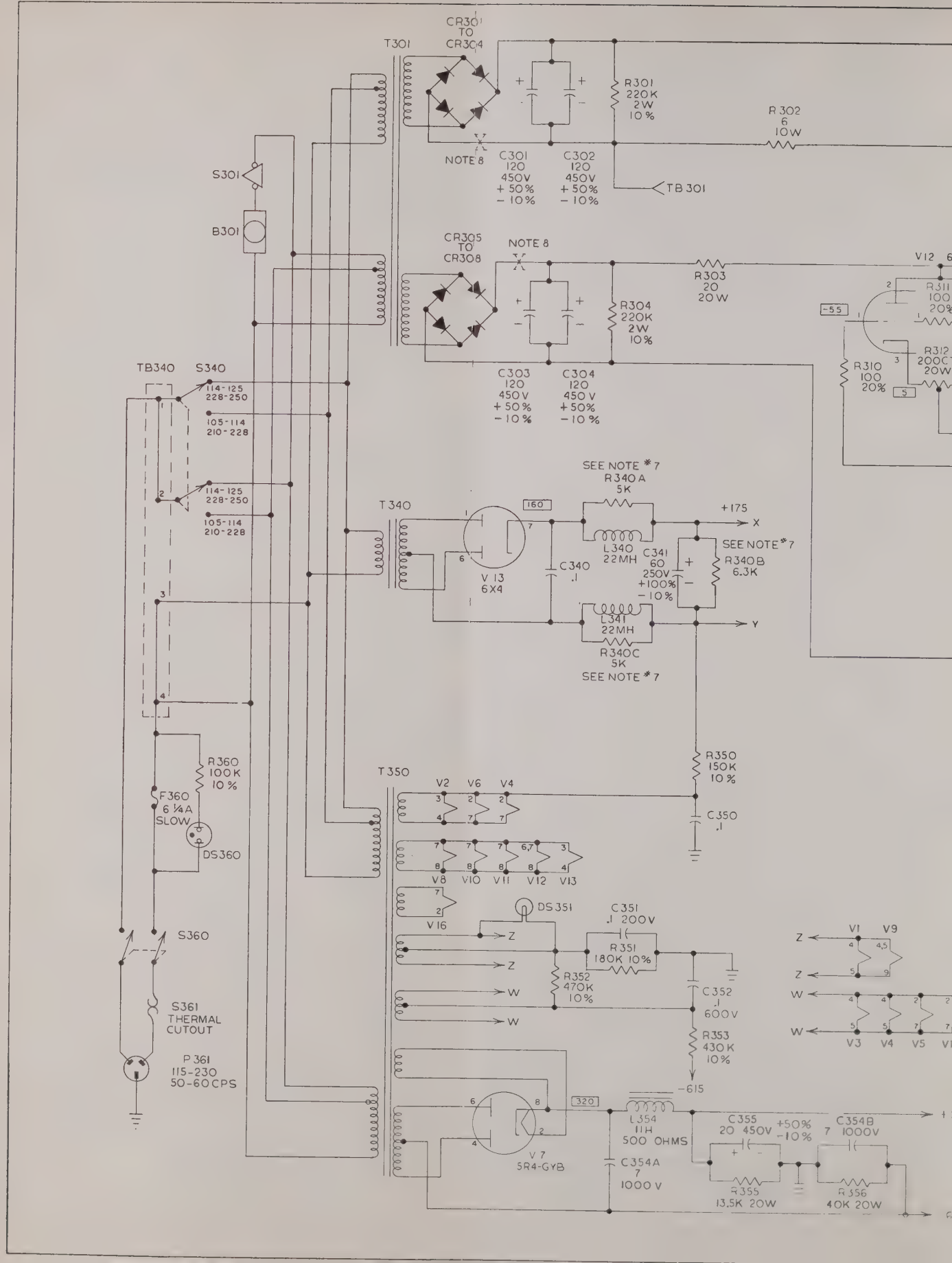
CR301 TO CR304
T301
R301 220K 2W 10%
R302 6 10W
NOTE 8
C301 120 450V +50% -10%
C302 120 450V +50% -10%
TB301
S301
B301
CR305 TO CR308
NOTE 8
R303 20 20W
R304 220K 2W 10%
C303 120 450V +50% -10%
C304 120 450V +50% -10%
V12
R311 100 20%
R312 200C 20W
R310 100 20%
-55
5
TB340
S340
114-125 228-250
105-114 210-228
114-125 228-250
105-114 210-228
T340
160
SEE NOTE #7
R340A 5K
+175
X
L340 22MH
C341 60 250V +100% -10%
SEE NOTE #7
R340B 6.3K
C340 .1
V13 6X4
L341 22MH
Y
R340C 5K
SEE NOTE #7
R360 100K 10%
F360 6 1/4A SLOW
DS360
T350
V2 V6 V4
R350 150K 10%
C350 .1
V8 V10 V11 V12 V13
V16
DS351
C351 .1 200V
R351 180K 10%
Z
Z
W
W
R352 470K 10%
C352 .1 600V
R353 430K 10%
-615
V1 V9
V3 V4 V5
S360
S361 THERMAL CUTOUT
P361 115-230 50-60CPS
320
L354 11H 500 OHMS
V7 5R4-GYB
C354A 7 1000V
C355 20 450V +50% -10%
C354B 7 1000V
R355 13.5K 20W
R356 40K 20W

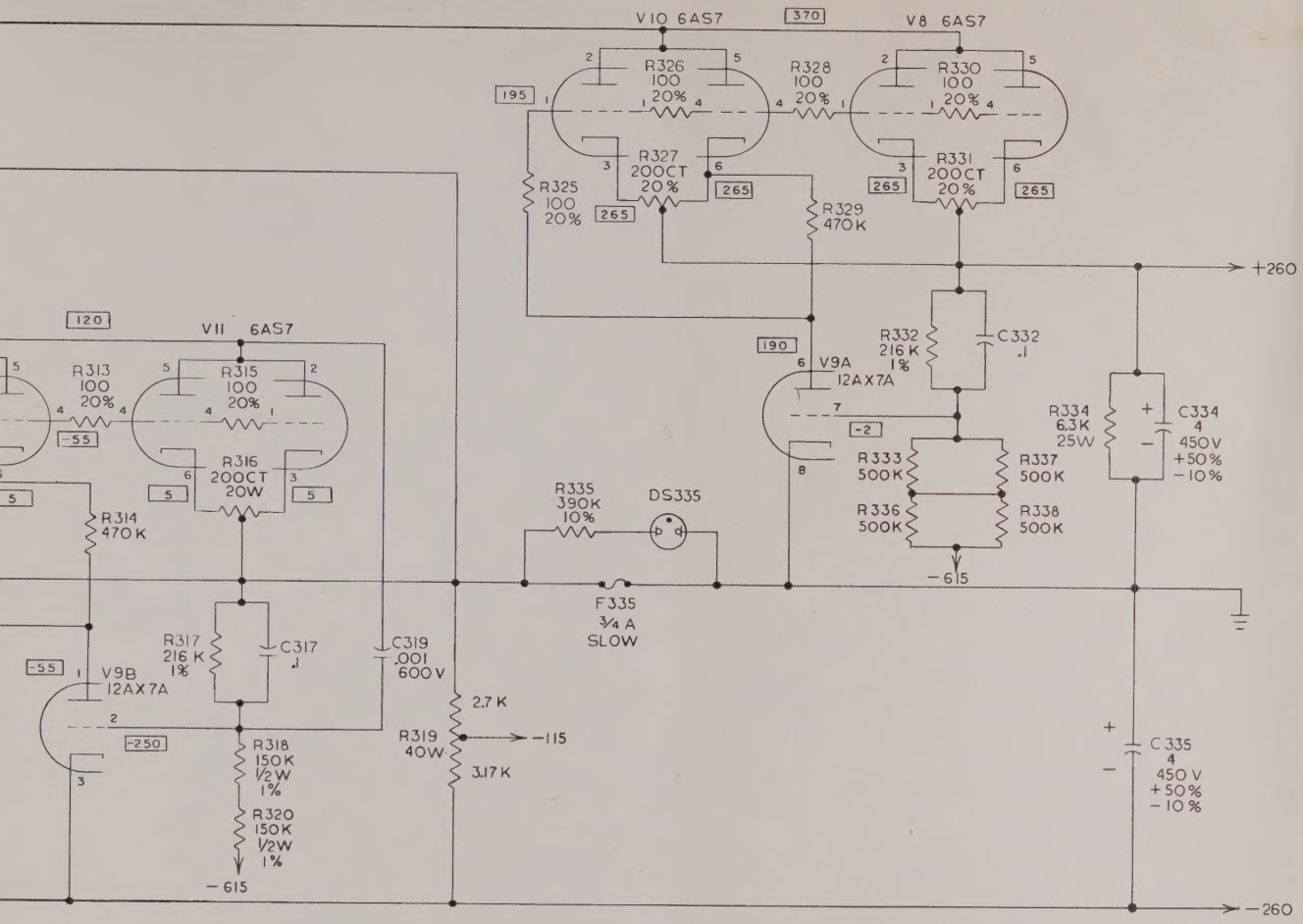

NOTES

1. RESISTANCES IN OHMS UNLESS OTHERWISE SPECIFIED. K=1,000 M=MEG=1,000,000
2. RESISTORS ±5% ½ WATT UNLESS OTHERWISE SPECIFIED.
3. CAPACITORS IN UFD UNLESS OTHERWISE SPECIFIED.
4. CAPACITORS ± 10% 400 WVDC UNLESS OTHERWISE SPECIFIED.
5. CR301 TO CR308 DC CURRENT 500MA, SURGE CURRENT 35A, PEAK INVERSE VOLTAGE 600V.
6. VOLTAGES SHOWN IN SQUARES REPRESENT THE NORMAL QUIESCENT TUBE VOLTAGES WITH INPUT SHORTED, OUTPUT DC LEVEL ZEROED AND QUIESCENT CURRENT ADJUSTED FOR -1 VOLT ON TB301.
7. 16.3K 55 WATT RESISTOR TAPPED AT 5K AND 11.3K.
8. DCA-50 SERIAL NOS. 117 THRU 156 AND DCA-50R SERIAL NOS. 104 THRU 108 HAVE A 5 OHM 10W RESISTOR IN SERIES WITH LEAD AT POINT X.

NOTE:
TB340 LOCATED ON INSIDE REAR APRON OF CHASSIS

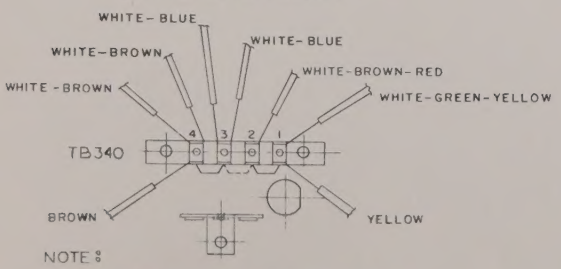

NOTE:
115 VOLT OPERATION AS SHOWN.
FOR 220 VOLT OPERATION REMOVE JUMPER FROM 1 AND 2, 3 AND 4 THEN CONNECT 2 AND 3 AS SHOWN DOTTED.

FIGURE 15
SCHEMATIC DIAGRAM
POWER SUPPLY SECTION
MODEL DCA 50(R)

Krohn-Hite
CAMBRIDGE, MASS. U.S.A.

REV. 1/17/63

KROHN-HITE
CORPORATION

PRINTED IN U.S.A.